TECHING®

Metal Machinery Assembly Model

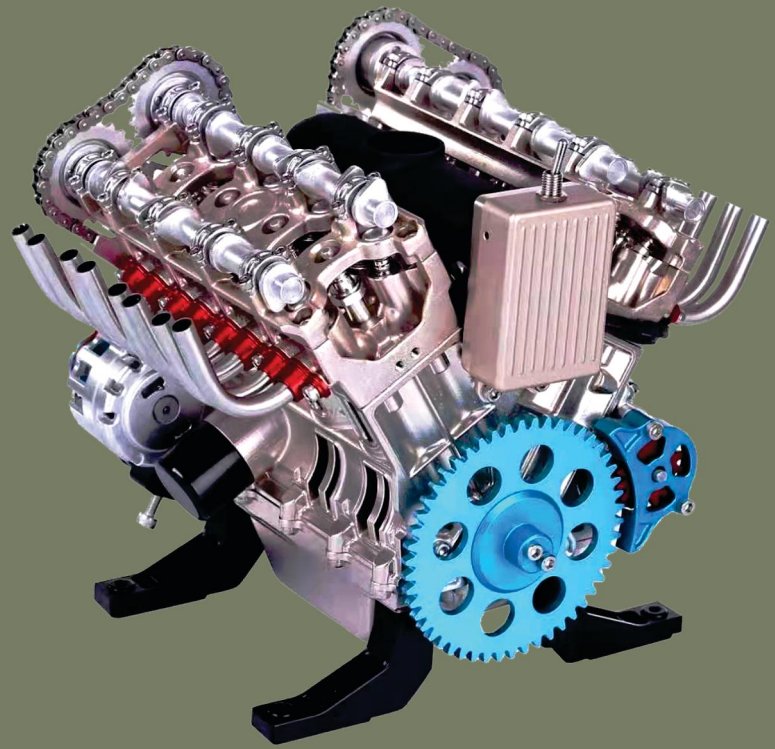

V8 Engine

MODEL:DM118

Assembly Difficulty ★★★★★

Structural features：

1.Eight-cylinder V-shaped layout structure

2.Overhead camshaft valve control structure

3.Cam chain transmission gear

4.Traditional crankshaft connecting rod system

5.The number of parts exceeds 660

Real Model Real World

General information about product

I. Product Data

Product name: V8 Engine

Product model: DM118

Main material: Anodized aluminum +stainles

Charging voltage: DC 5V

Battery capacity: 800mAh

Assembly difficulty: ★★★★

Product standards: GB/T9254–2008

GB/T17626.2–2006

Quality grade: A

Please tap the following link to download TECHING CULTURE APP for more products information: http://www.techingedu.com/down/ .

II. Product description

◆ Teching Craftsman series of products are metal structure assembly models. Its primary material is aluminum alloy with anodized surface, and the product structure is a real industrial structure;

◆ Assemble parts using various tools with the installation procedures and methods substantially compliant with practical industrial requirements;

◆ This series of products are principally designed to improve users' hands–on ability and concentration, and to develop habits of "preciseness and stress on discipline";

◆ Learn about various industrial machines, and study various industrial structures to improve user's capability of research and innovation.

III. Assembly Requirements

◆ Be sure to read the Basics of Standard Parts Assembly carefully to master basic standard parts assembly procedure and the usage of tools before assembly;

◆ The table shall be kept tidy and clean during assembly to prevent parts being lost or incorrectly assembled. Assemble parts in a rigorous and orderly fashion, view the diagrams carefully, and avoid incorrect assembly;

◆ Pay attention to the prompt text in instruction manual, carefully view the part installation orientation, and avoid incorrect comprehension. Pay attention to the requirements on testing;

◆ Lubricating oil shall be applied to friction areas to the greatest extent to prevent jamming during operation. Fastening screws must be thoroughly mounted to prevent looseness of parts;

◆If you have any doubt when adjusting any assembly clearance or tightness after the completion of assembly, please refer to our website or WeChat public account;

◆ Users are encouraged to optimize the parts using material removing tools like files and sand paper with adult care where the personal safety is guaranteed;

◆ Users are encouraged to perform part modification or overall modification of model without potential safety hazard so as to develop modification capability as soon as possible;
◆ The user may disassemble this model and put it in the package again according to the parts list attached hereto;
◆If any part is lost, please inquire of or purchase it from us (Teching official online store);
◆The model structure is subject to continual improvement. If the real object differs from the instruction manual, please refer to our latest assembly information.
◆ Once the product fails to function due to battery failure, lubricating oil shortage or dust accumulation in product gaps because it is left unused for long, it's advisable to change the battery or disassemble and clean its parts.

Precautions

I. Safety Instruction

◆ Please read this manual carefully so that you are in a position to use this product correctly and safely;
◆ This series of products are industrial–level metal models, so its assembly and use requires certain safety awareness; improvement of safety awareness is also a function of the model;
◆ This model is suitable for users aged 14 and over. Please read this manual carefully for relevant safety information;
◆ Strictly prohibit children or pets swallowing or biting this product or its spare parts, since this may cause injury/damage;
◆ Use assembly tools rationally, assemble the parts in strict conformity with the instruction manual, and avoid forcible handling to avoid scratches; keep sharp points of tools or parts away from the eyes to avoid contusions;
◆ This model is made up of metallic parts mainly, and has a certain level of hardness and a certain weight; please place it properly to avoid bodily injuries;Protect the products and accessories against intense shock and vibration so as to avoid personal injury and product damage;
◆ During mechanical movement, do not put a finger or any other part of the body within the movement range to avoid contusions;
◆ Wire connectors must be connected according to the marks specified in the instruction manual to avoid short–circuit or failure arising from wrong connection;
◆ Charge, discharge and place the battery as required; it is advised to replace the battery when it has not been used for 3 months or more;
◆ Do not prevent any part from running forcibly in any form; to do this, turn off the power directly;
◆ To refit this model, please pay attention to the relevant part parameters, and avoid using any high–power electric part or device that may result in an accident.
◆ Please use parts of this product properly as per instruction manual. Don't use them for other purposes.

II. Battery and charging precautions

◆ This product is delivered with dedicated charging cable. Users shall use their own power adapters; output DC voltage: 5V; output DC current ⩾1000mA;
◆ Please make sure the contact is dry and free of dirt before charging. Please don't charge the battery if the product is not in use or is in repair;
◆ Don't put the battery in fire or have it exposed to sunlight, fire or similar excessively hot environment, since this may lead to leakage, excessively high temperature, bursting or ignition of battery;
◆ If improper change of battery may cause explosion, the battery must be replaced with one of identical or equivalent type;

◆ Never disassemble, squeeze, heat and set fire to the lithium battery delivered with this product, and never touch and pry the battery using any sharp object or screwdriver, etc., since this may cause the battery to ignite or burn;
◆ In the case of excessively high temperature, discoloration, bulging, leakage and other anomalies during the use, charging or keeping of battery, please take it out of service and change it with a new one to avoid safety problem;
◆ Since the battery temperature rises when it's being charged, please don't have the battery to come into contact with inflammables (e.g. bedside, clothing and books, etc.) since this may result in a fire;
◆Please don't charge the battery in a moist space with high temperature; the temperature is recommended to be 0~35° C, and the humidity shall not exceed 65%; the design max. ambient temperature for using the product is 45° C;
◆ To alleviate the risk of electric shock, children are not allowed to use the product without the help of their parents or other custodians.

III. Product Declaration

◆ Please carefully read and observe various instructions and warnings in this manual before using this product. Our company shall not be held responsible for any consequence of failure to properly use this product or observe related operating instructions;
◆ This product is suitable for users aged 14 and over. Our company shall not be held responsible for any safety problem arising from the use of this product by too young users or users
who are not familiar with relevant safety requirements;
◆ As a model in industrial structure, this product is designed exclusively for learning and experience. Do not use this product for other purposes; otherwise, we will assume no responsibility for any consequence thereof;
◆ We have been improving the design and operation features of our product, so separate notice will not be given for slight difference between instruction manual and actual product. Hence, any claim for compensation filed based on the data, pictures or text of this instruction manual will be rejected;
◆ For constant improvement and sustainable development, our company reserves the right to modify and improve any product detail given in this manual without prior notice;
◆ The pictures in instruction manual guide users for operation, and are thus for indication only; the real product shall prevail;
◆ Our company and its suppliers shall not be held responsible for any special, incidental, collateral or indirect loss in any case to the greatest extent the law permits, regardless of its cause;
◆ Please keep this manual properly since it contains important information.

Contents

1

Assembly instructions

P3

P2. Crankshaft connecting rod assembly
P4. Cylinder assembly
P9. Engine body assembly
P12. Starting motor assembly
P14. Generator assembly
P16. Water pump assembly
P18. Tension base assembly
P20. Timing gear
P25. Belt mechanism
P28. Other accessories
P35. Troubleshooting

2

V8 engine parts list

P41

3

Warranty description

P48

Basic knowledge on standard parts assembly

1.Installation of screws

(1) Installation of screws

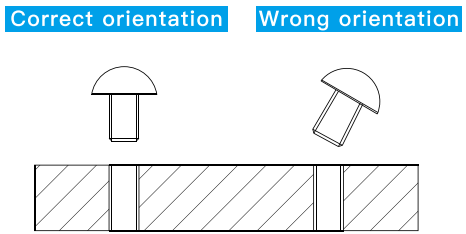

(2)Degree of screw tightening

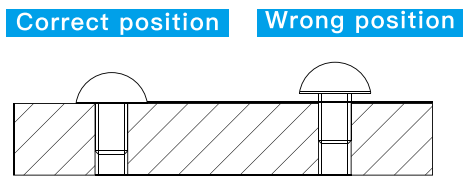

(3)Screw installation order

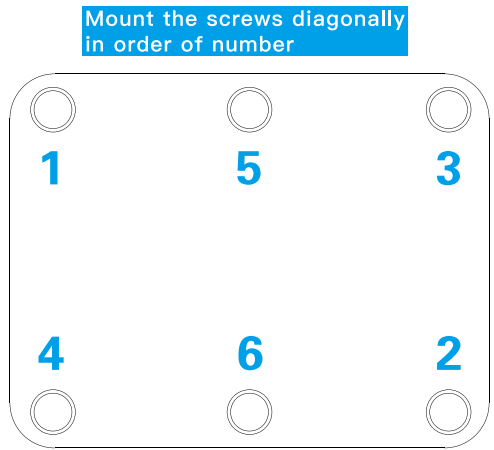

2.Installation of snap ring

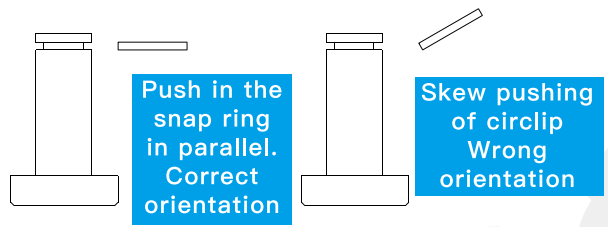

Important note:
before assembly, find the bottled lubricating oil, be sure to put enough oil in all the places that need to be lubricated, otherwise the machine is easy to get stuck

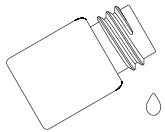

Position indicator for lubricating oil

1

1 Crankshaft connecting rod assembly

1.1 Assembly piston mechanism

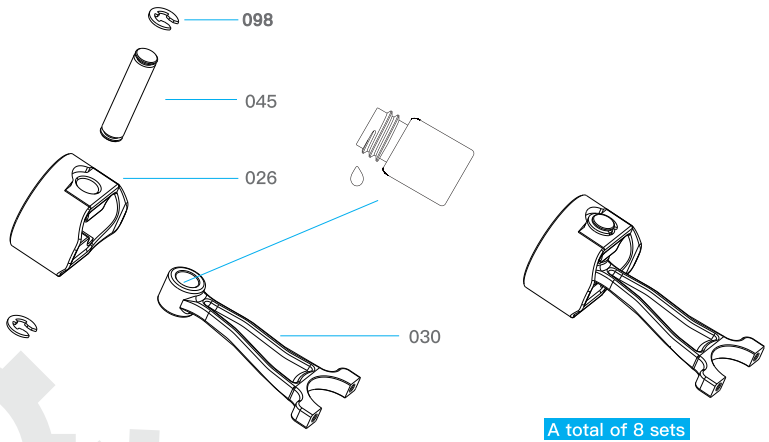

1.2 The piston connecting rod and crankshaft assembly

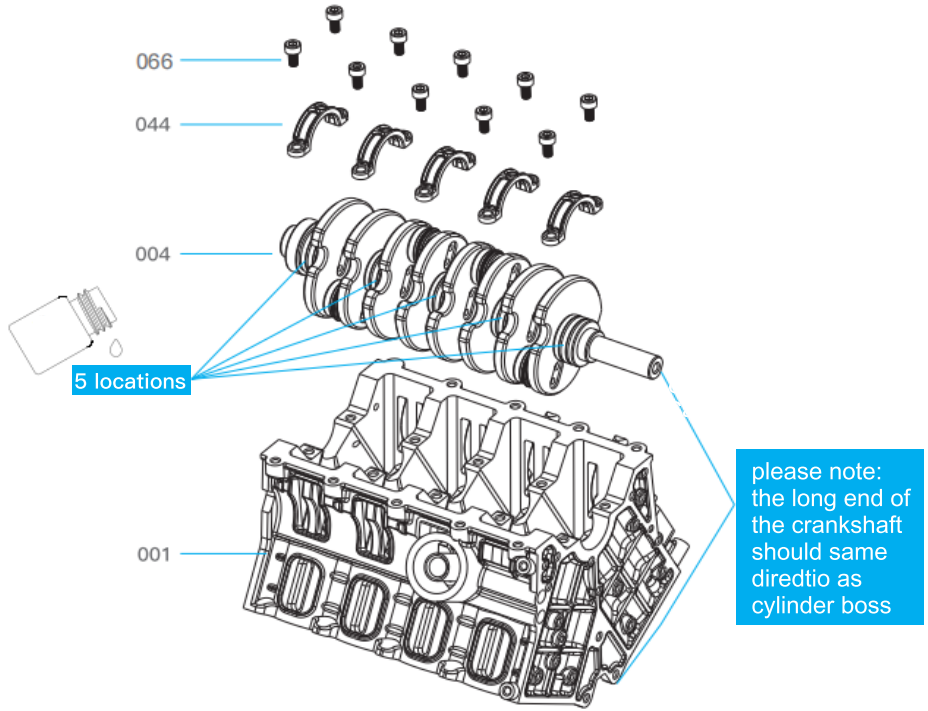

1.3 assembly and connection between crankshaft and cylinder block

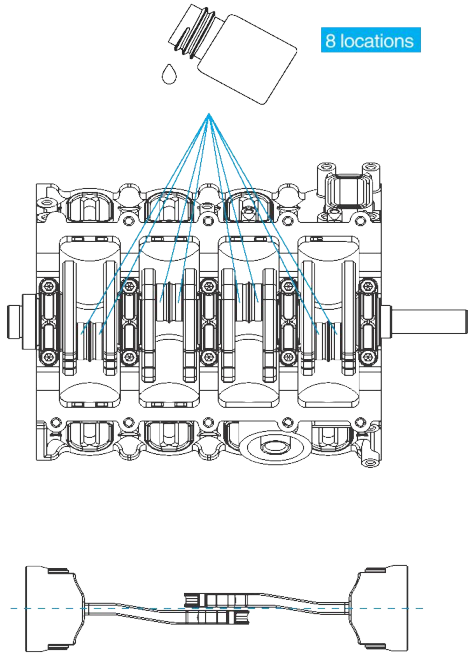

please note:
the two piston connecting rods should be installed relative to each other as shown in the figure

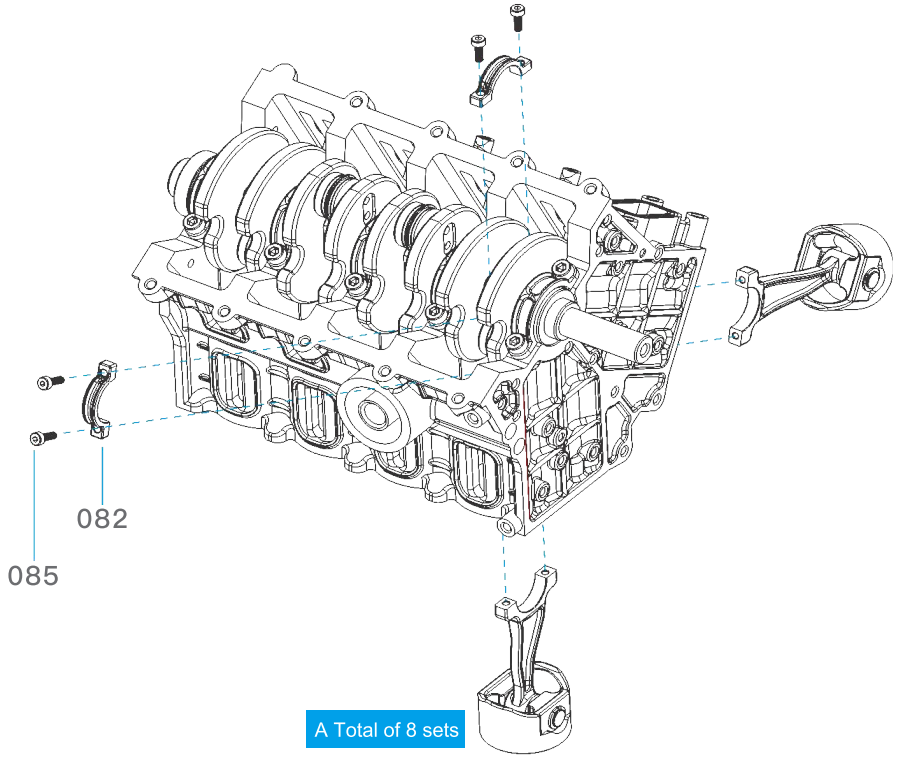

2. Cylinder assembly

2.1 Spark plug installation

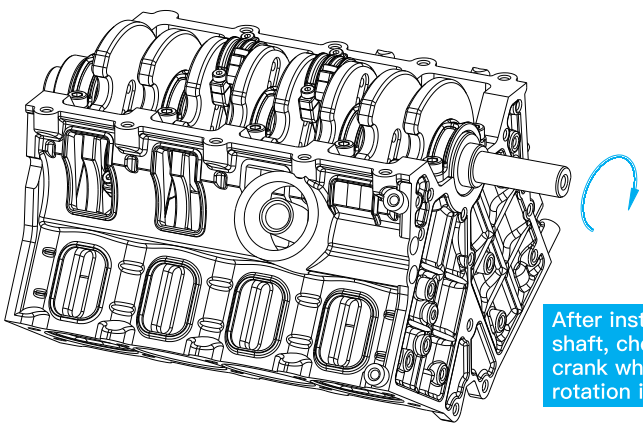

After installation, turn the shaft, check piston and crank whether the shaft rotation is smooth

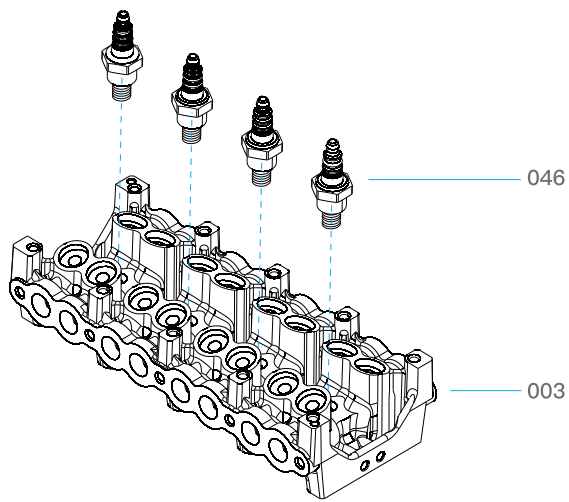

A total of 2 sets

2.2 Valve installation

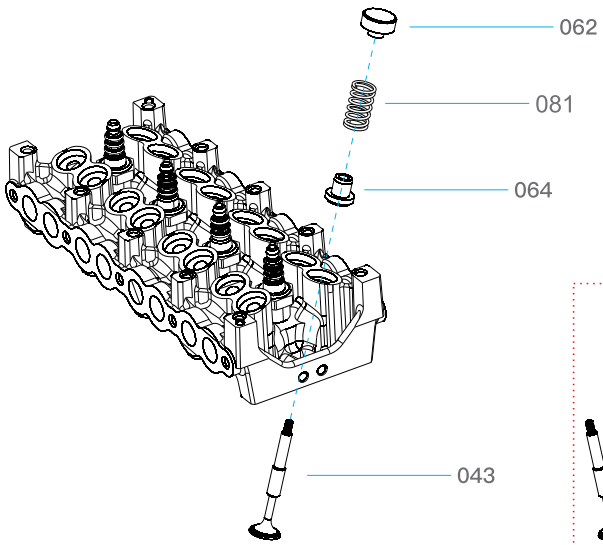

32 sets in total

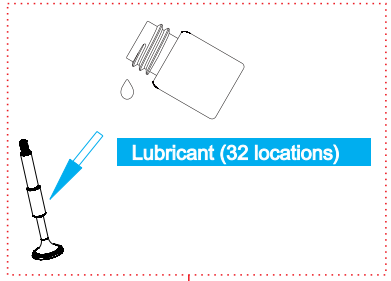

Warning:
32 valves must be lubricated.
If lubrication is not added, the valves will be stuck.

2.3 Check whether the valve installation is in place

After the valves are installed, check whether each valve is tightened and whether the height of each valve is at At the same height.

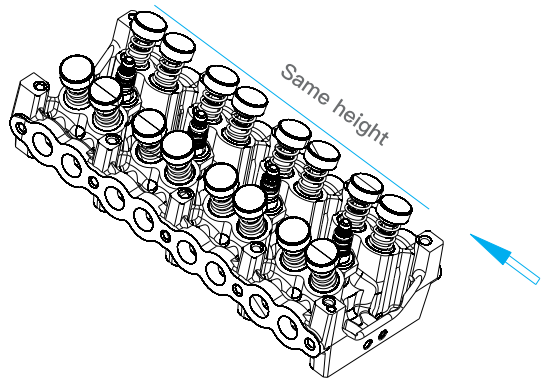

2.4 Cam seat installation

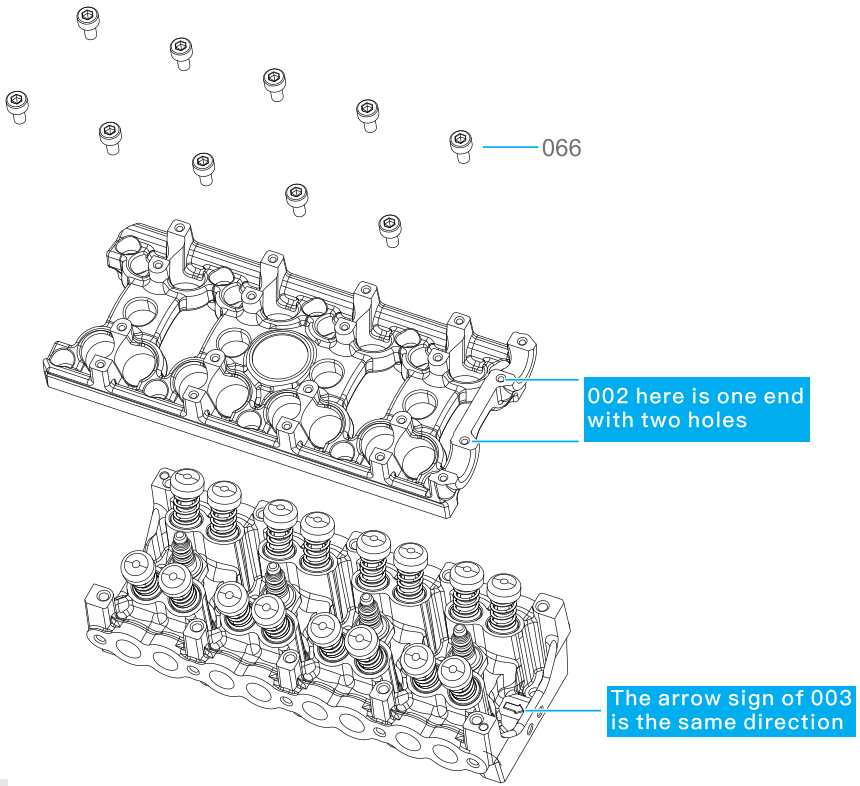

A total of 2 sets

2.5 Camshaft installation

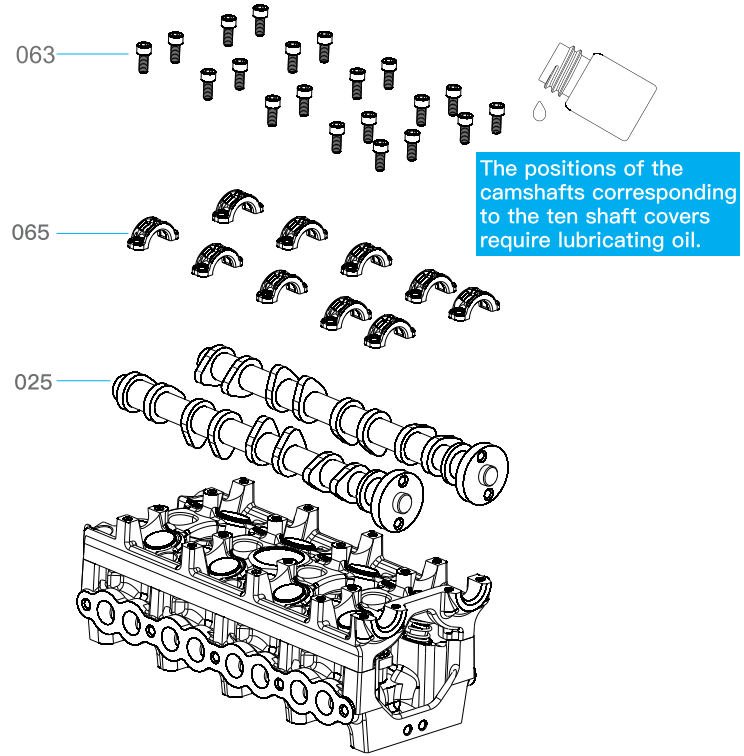

A total of 2 sets

2.6 Check the transmission of the camshaft

Rotate the camshaft to check whether the camshaft position and valve contact work smoothly.

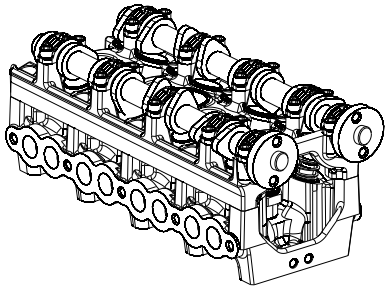

Two sets in total

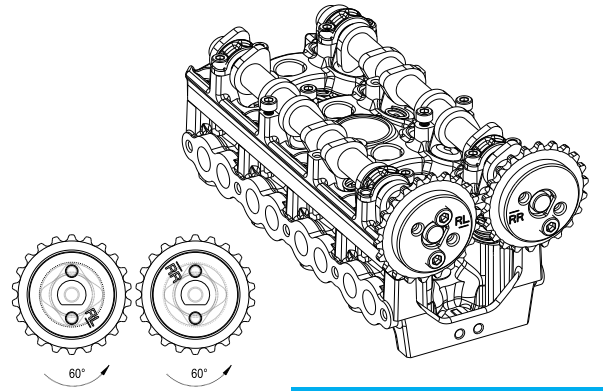

Rotate 60° counterclockwise

Align the timing line on the 067 and 068 sprocket

2.7 Installation of cam synchronization sprocket (right)

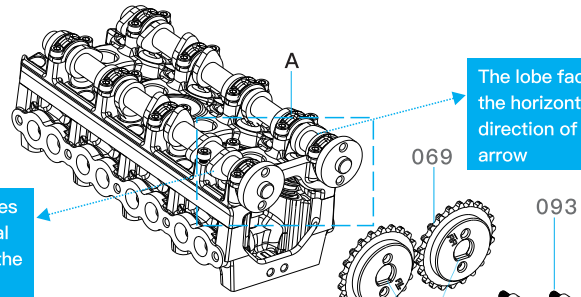

The lobe faces the horizontal direction of the arrow

The lobe faces the horizontal direction of the arrow

The surface facing down

2.8 Installation of cam synchronization sprocket (left)

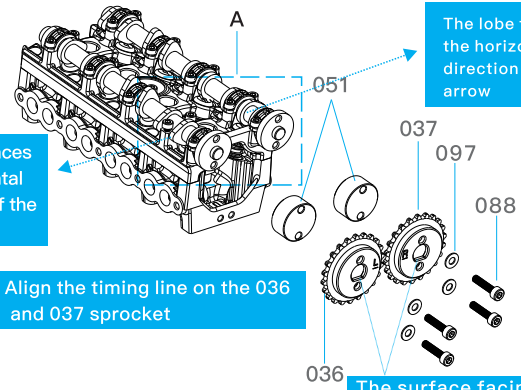

The lobe faces the horizontal direction of the arrow

The lobe faces the horizontal direction of the arrow

Align the timing line on the 036 and 037 sprocket

The surface facing down

2.9 Exhaust pipe assembly

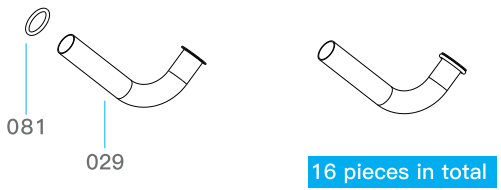

2.10 Installation of exhaust pipe (right)

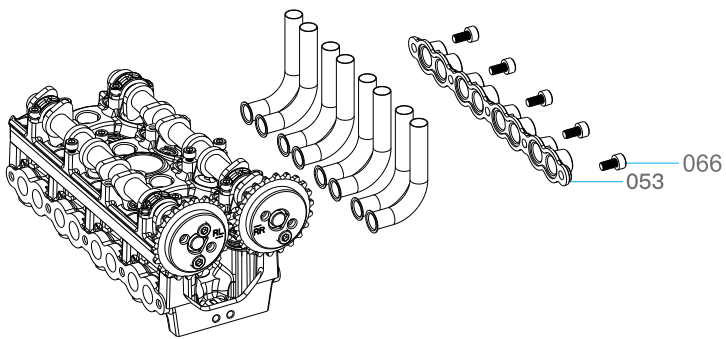

2.11 Exhaust pipe (left) installation

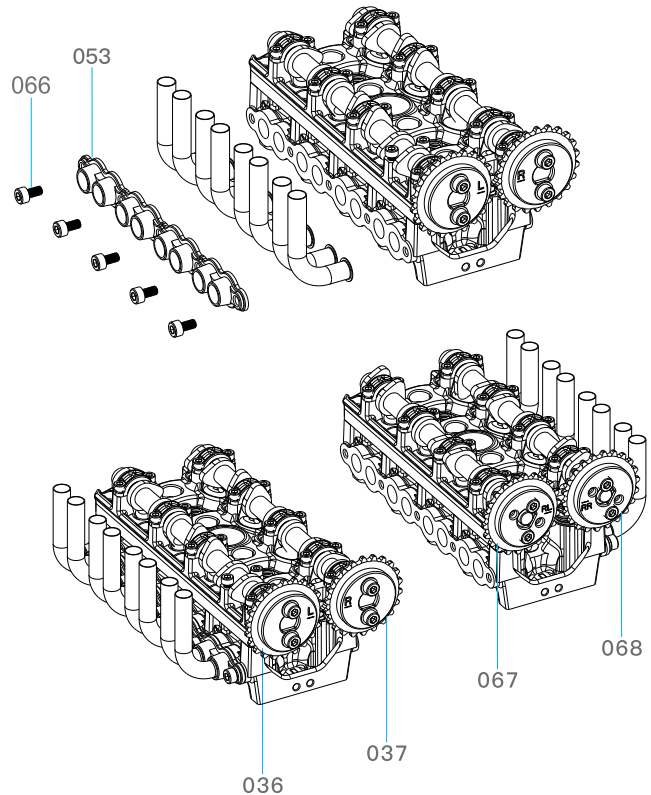

3. Engine body assembly

3.1 Installation of oil pan

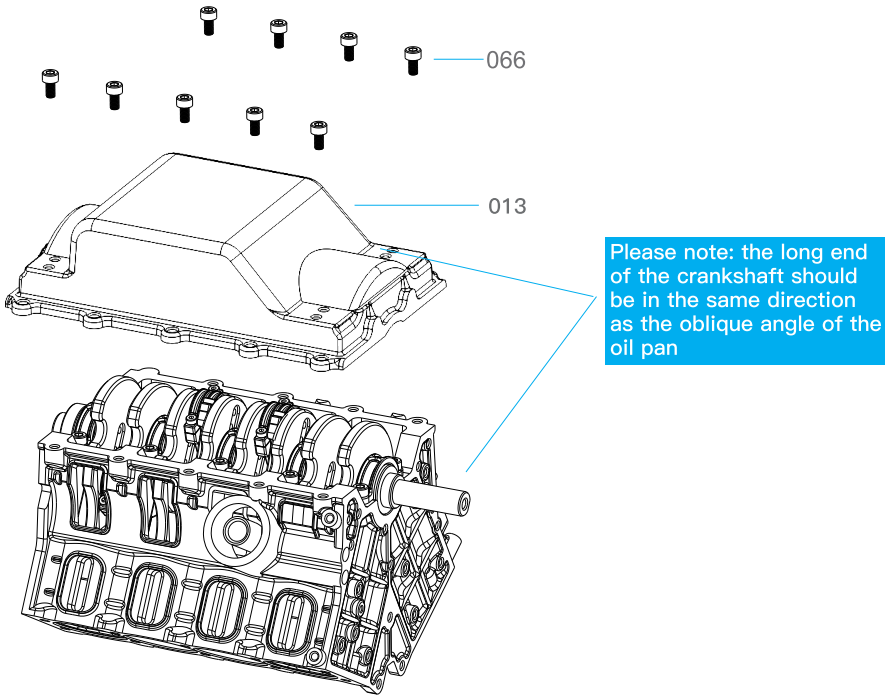

3.2 Engine bracket installation

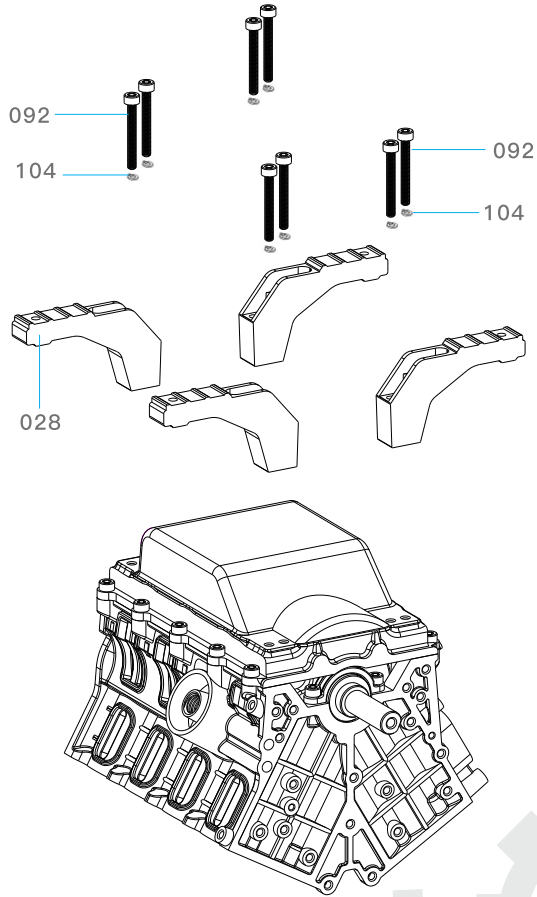

3.3 Cylinder assembly installation

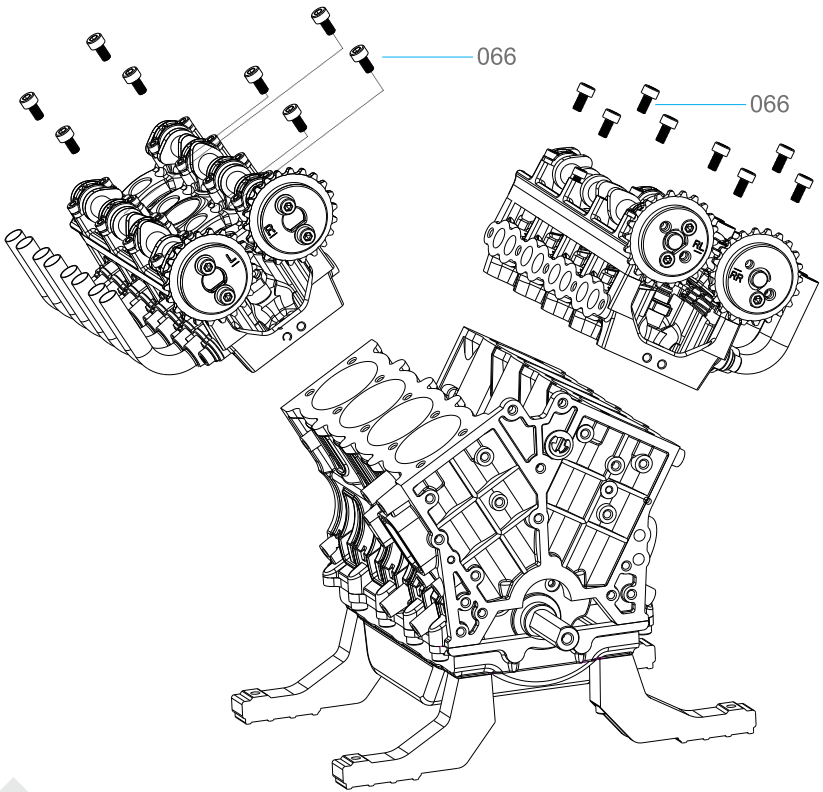

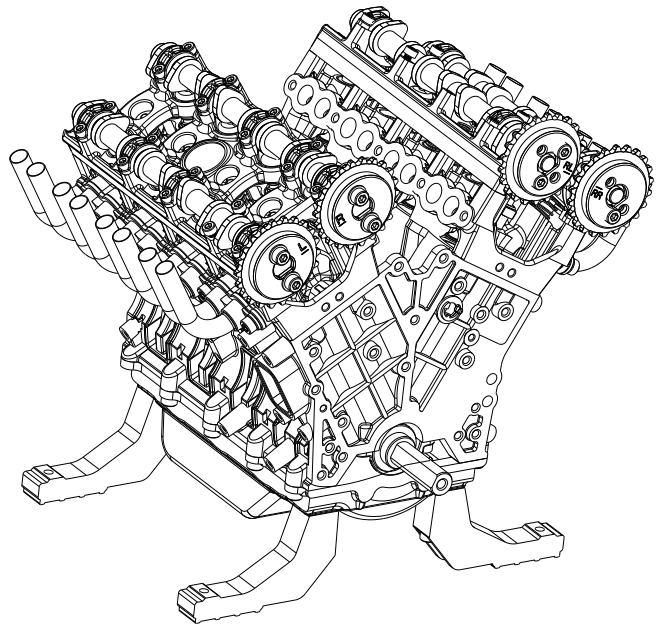

3.4 Rear cover installation

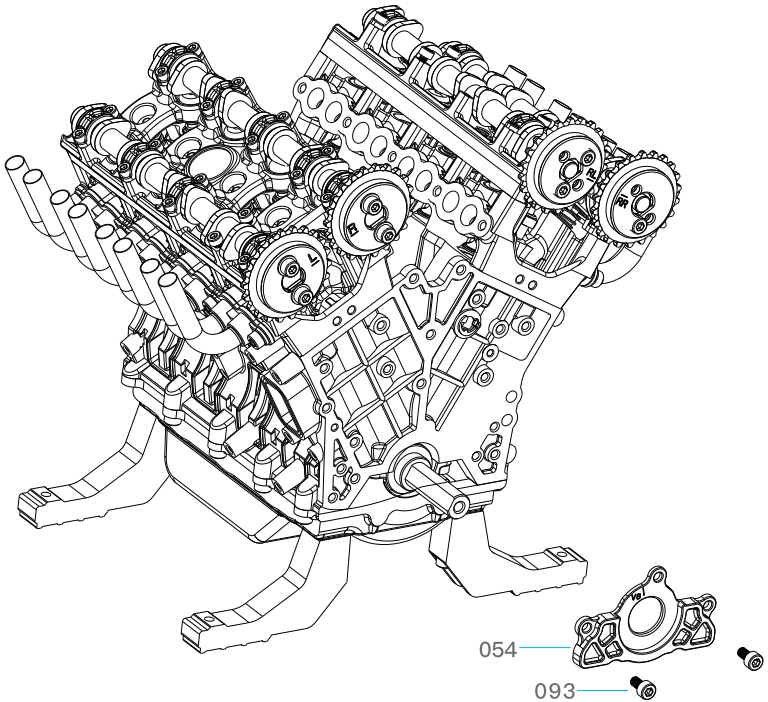

3.5 Front cover installation

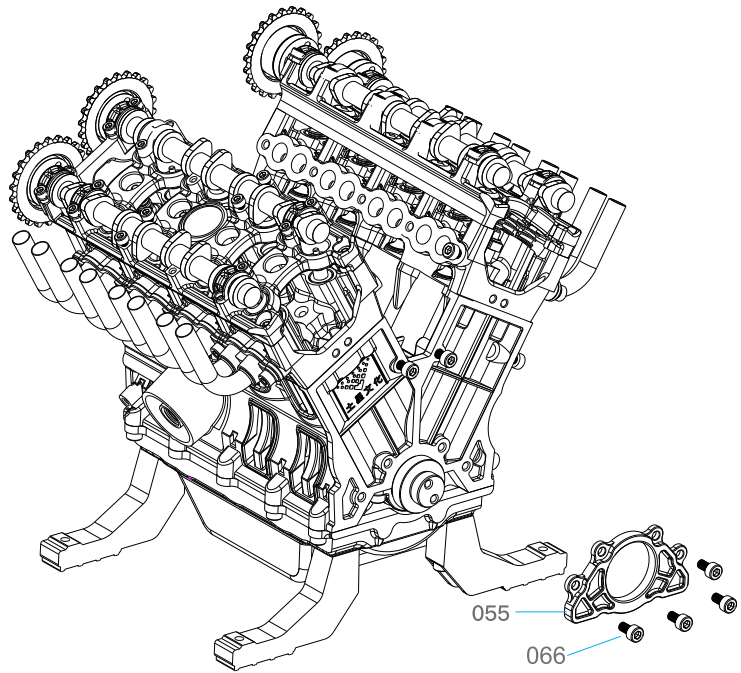

4. Starter motor assembly

4.1 Install the front cover of the starter motor

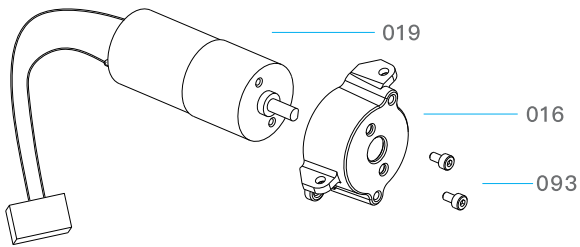

4.2 Install the rear cover of the starter motor

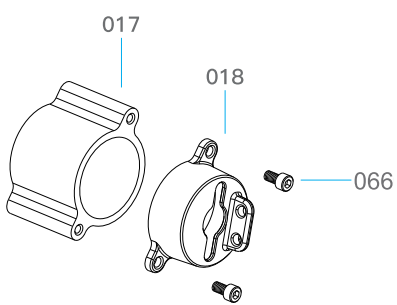

4.3 Front and rear cover docking

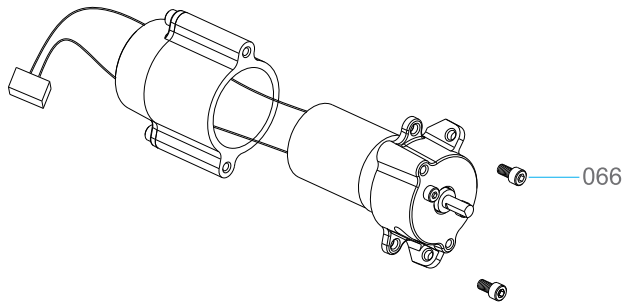

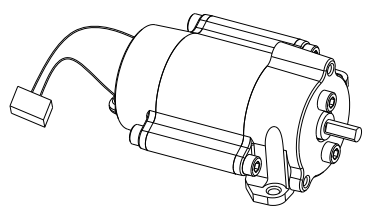

4.4 Installation of starter motor assembly

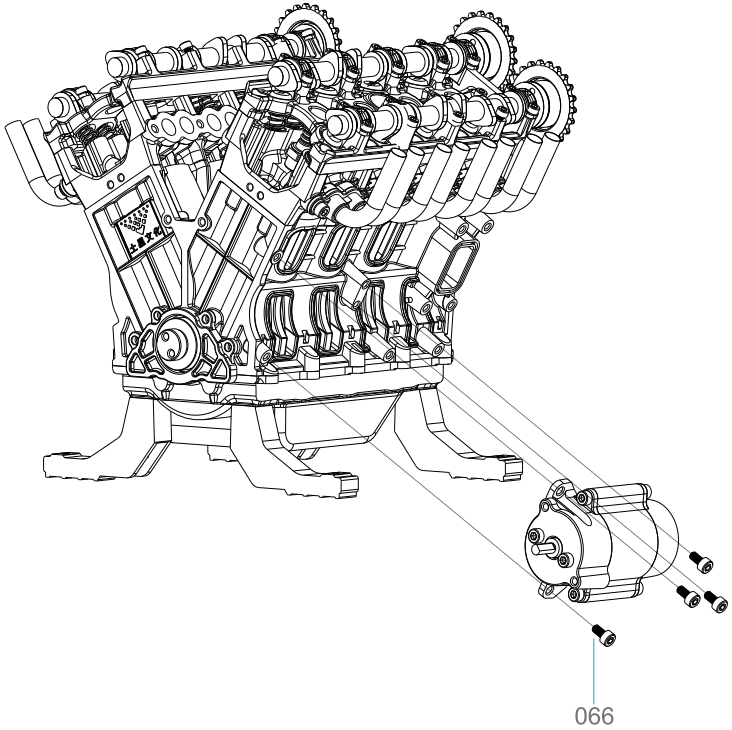

4.5 Flywheel installation

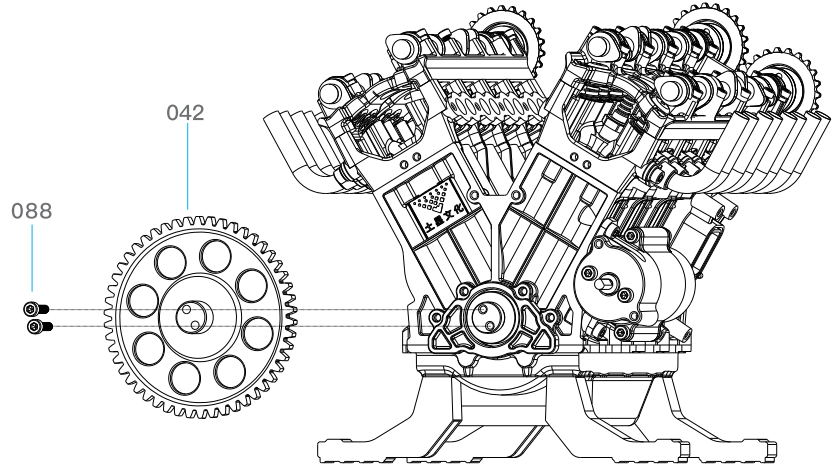

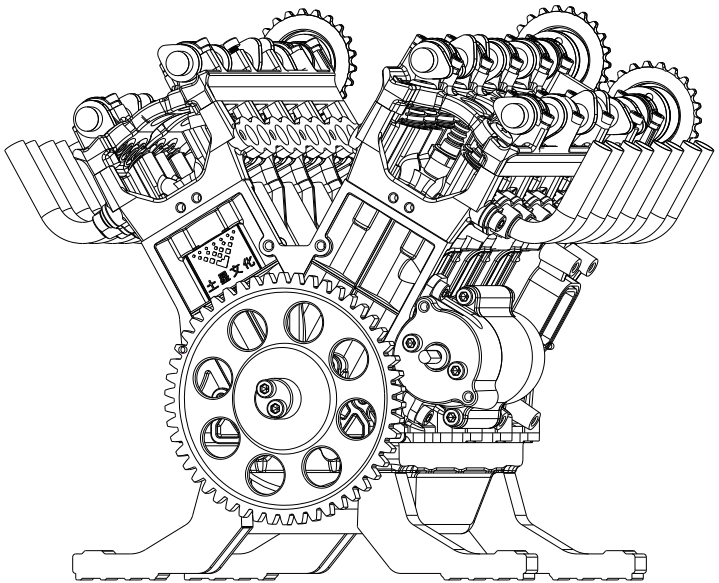

5 Generator assembly

5.1 Generator and generator front cover combination

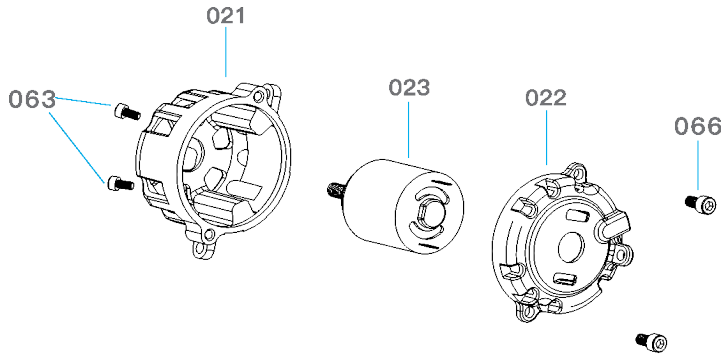

5.2 Install the engine back cover

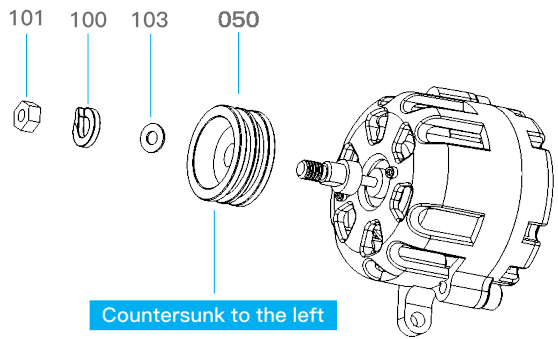

5.3 Installation of generator assembly

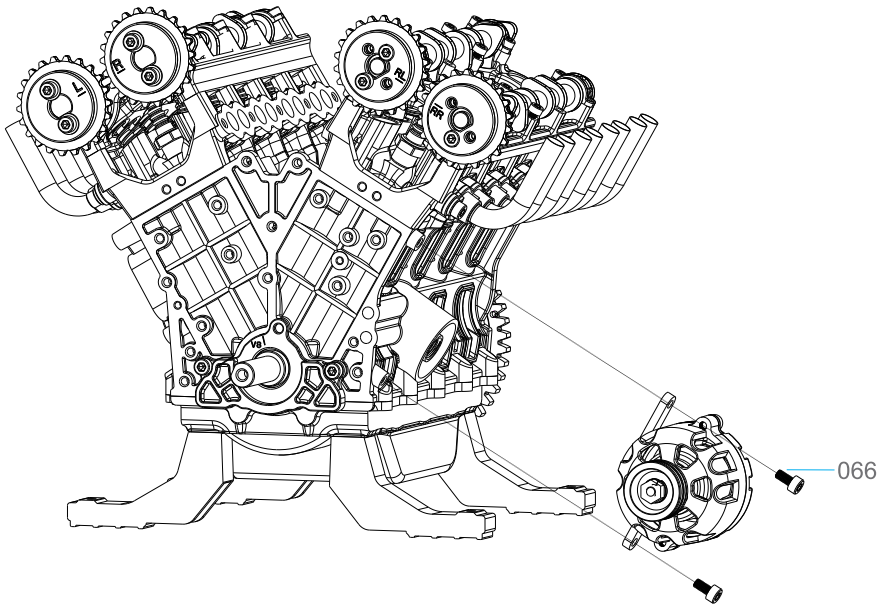

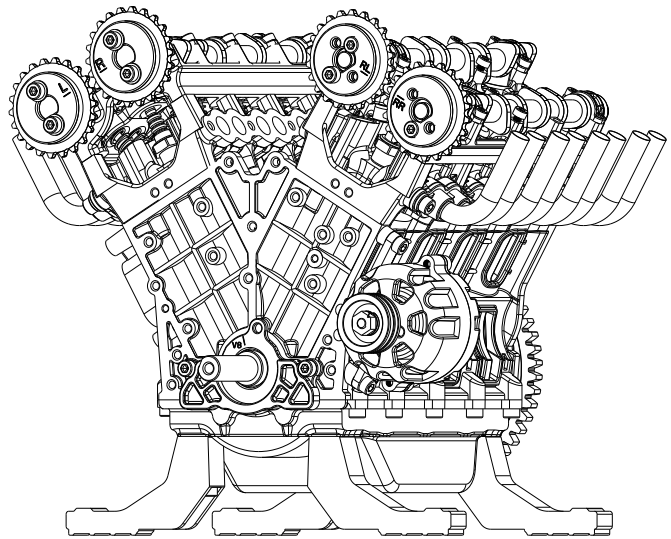

6 Water pump assembly

6.1 Docking of impeller, water pump and water pump box

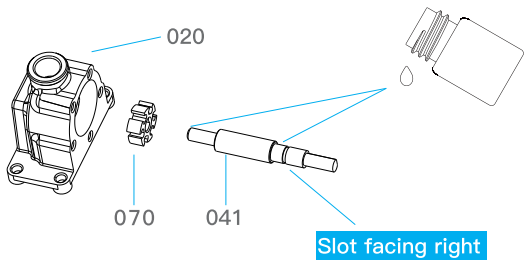

6.2 Install the end cover of the water pump

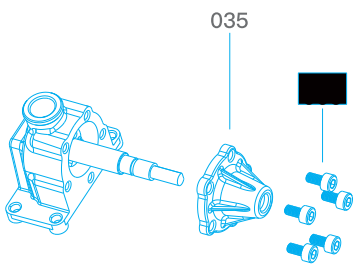

6.3 Bushing installation

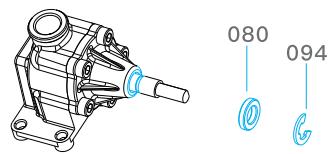

6.4 Install the water pump pulley

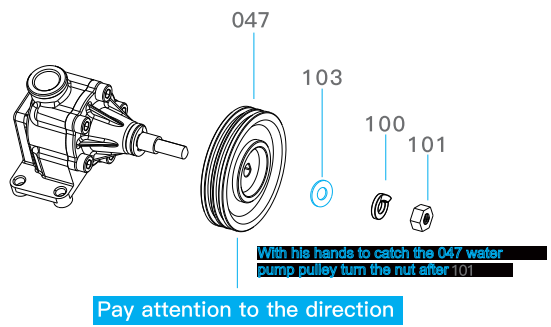

8 Timing mechanism

8.1 Installation of chain guide block

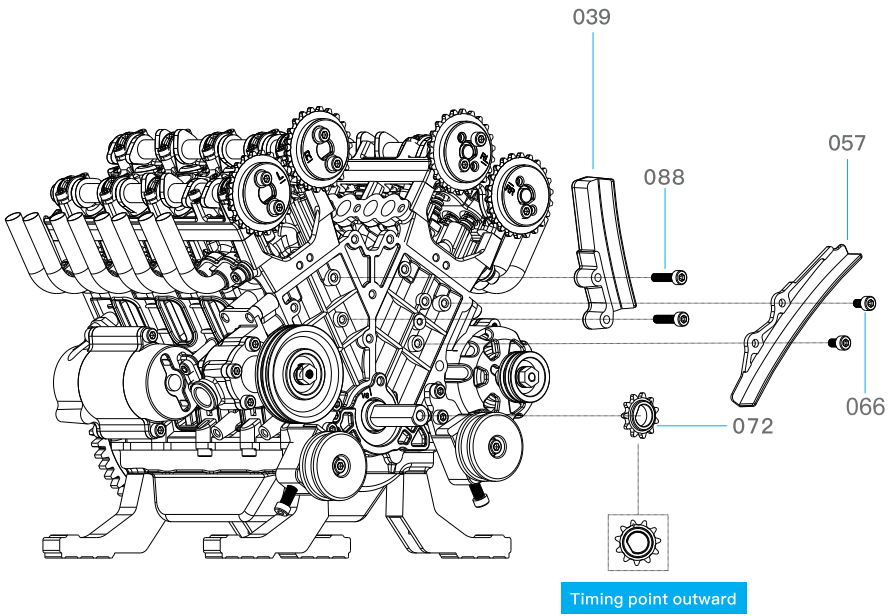

8.2 Corrected time

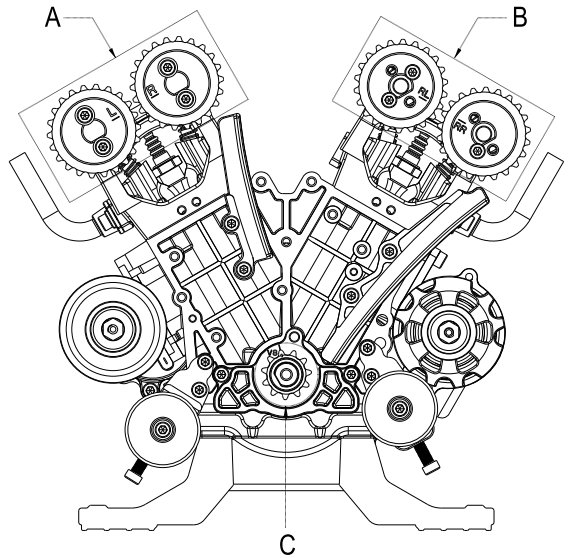

8.3 Timing chain 1 installation

As shown in the Image , align the timing points on the chain of the left and right CAM synchronous wheel. Align the crankshaft synchronous wheel with the timing points on the back end cover. Align the three timing points at the same time, and then set the chain.

A

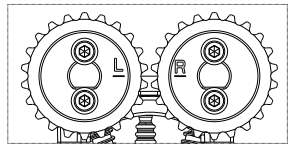

B

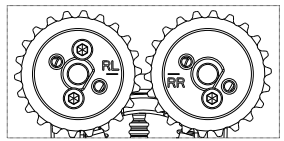

Timing line of cam synchronous sprocket

072 The upper timing point is aligned with the timing line as shown

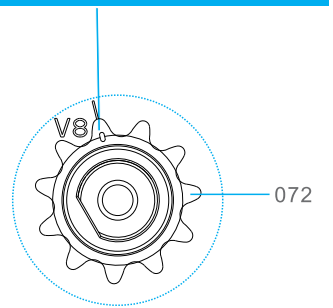

C

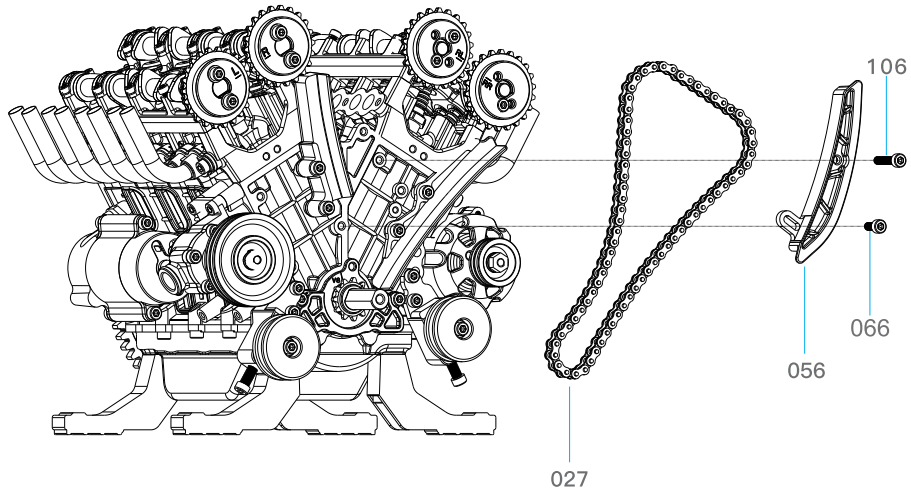

8.4 Timing chain 2 installation

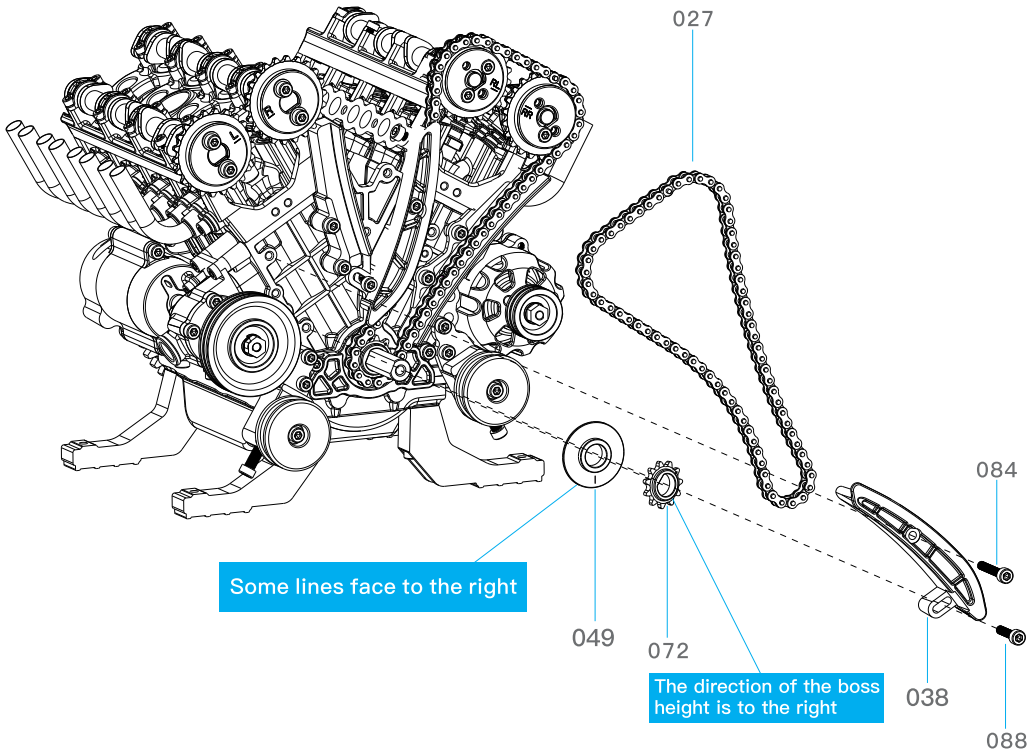

8.5 Installation of synchronous sprocket stop

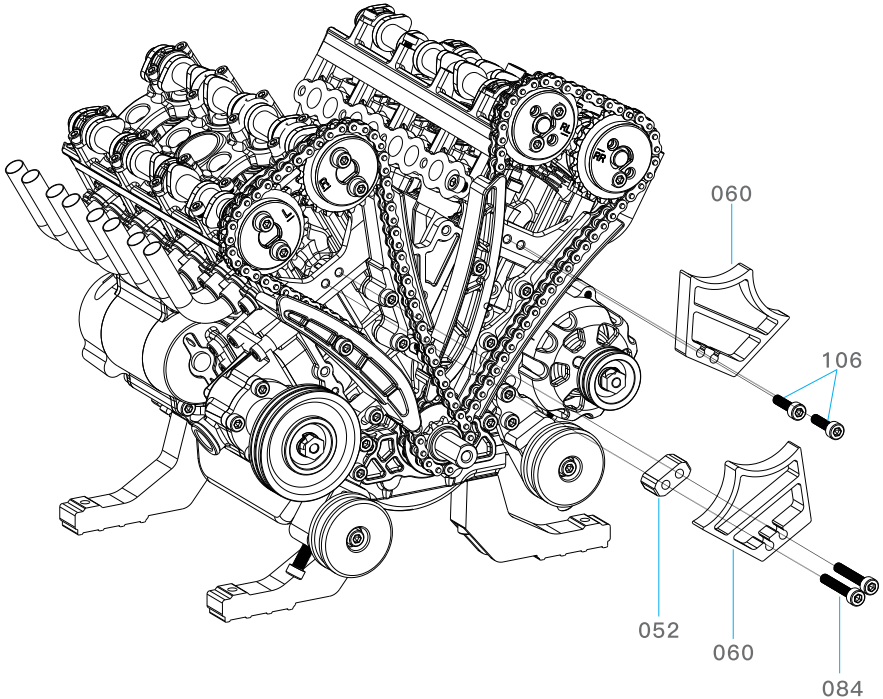

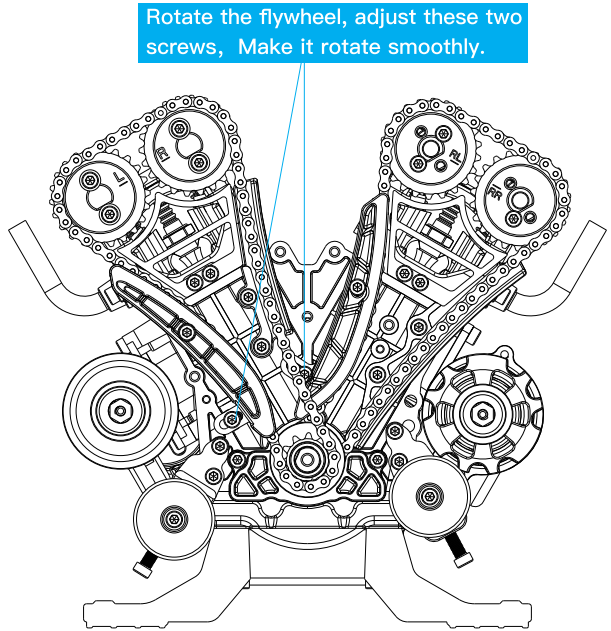

8.6 Installation the starter gear

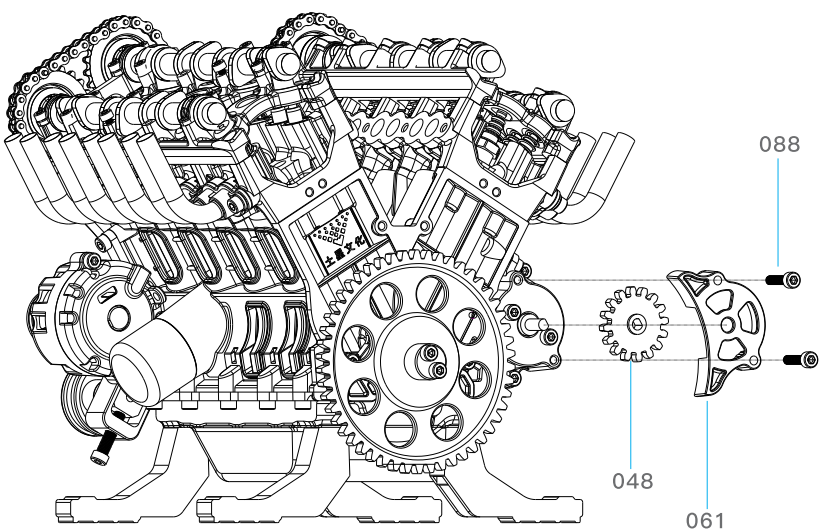

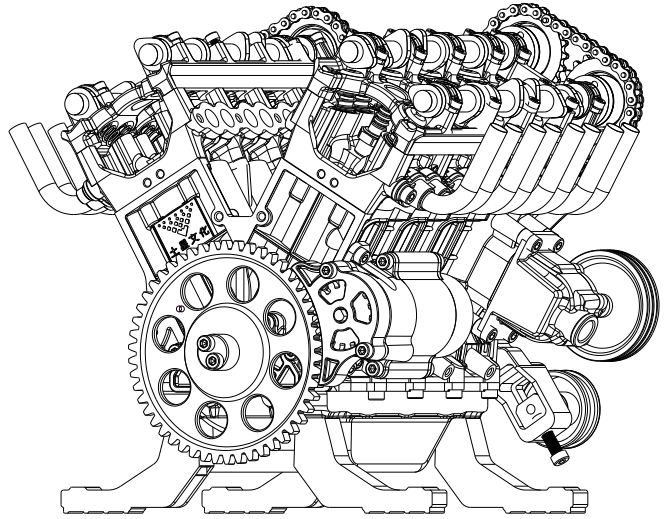

9 Belt mechanism

9.1 Guide pulley bracket assembly

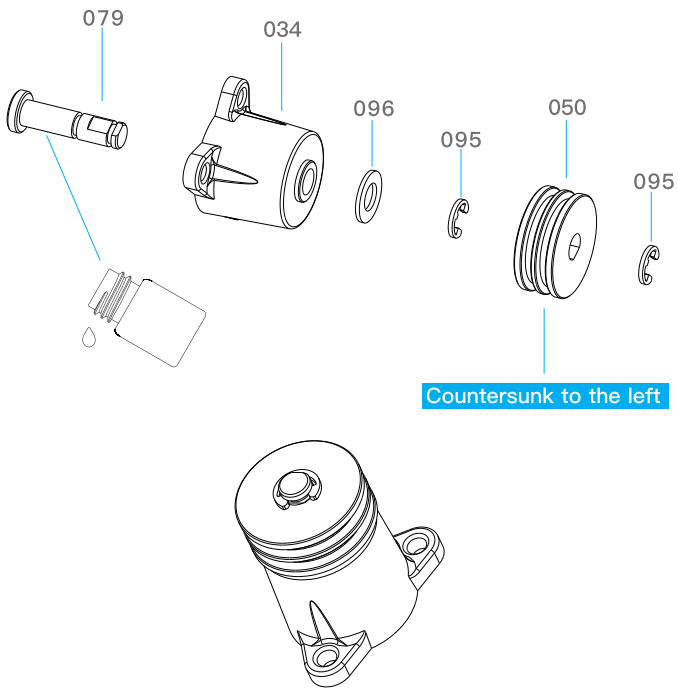

9.2 Guide pulley bracket installation

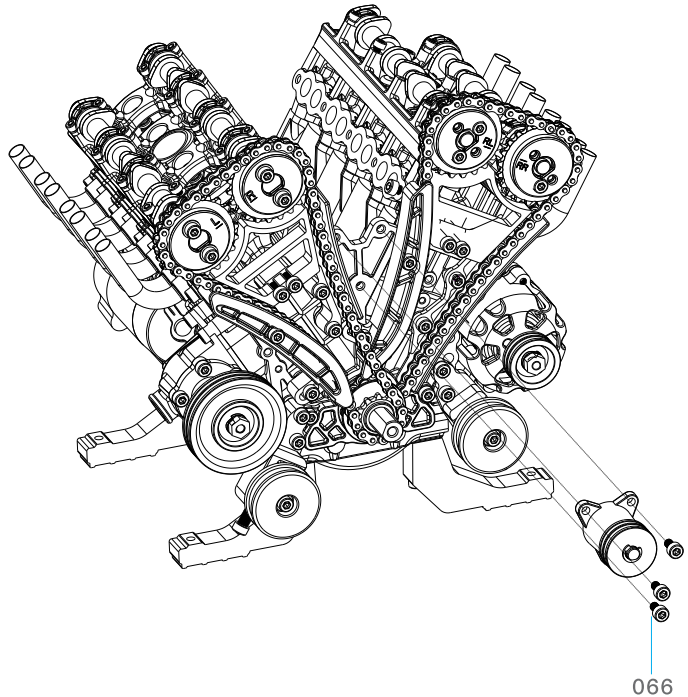

9.3 Assembly of guide wheel low bracket

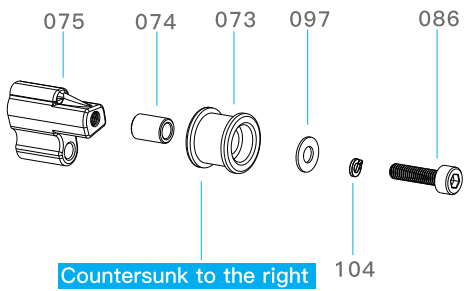

9.4 Assembly of guide wheel high bracket

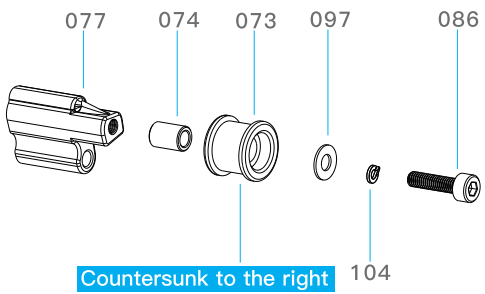

9.5 Guide wheel bracket installation

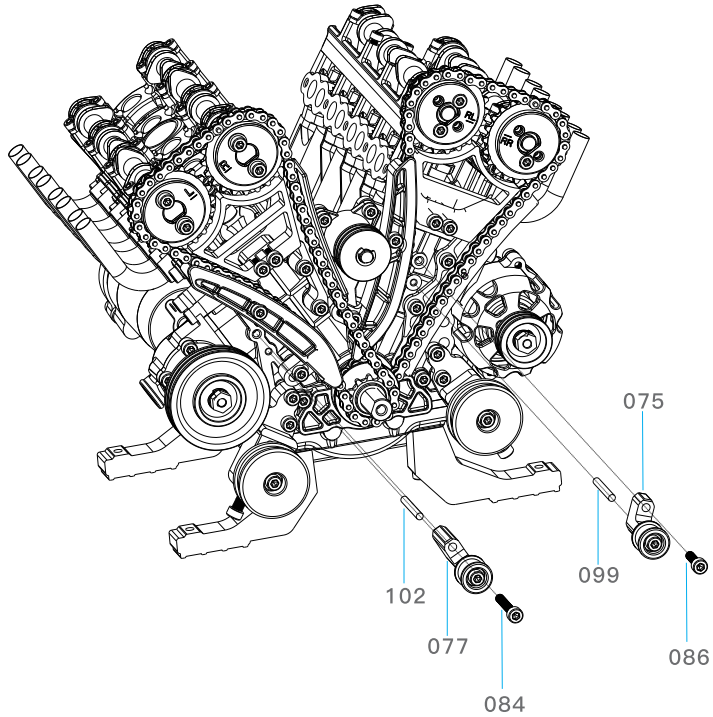

9.6 Crankshaft pulley installation

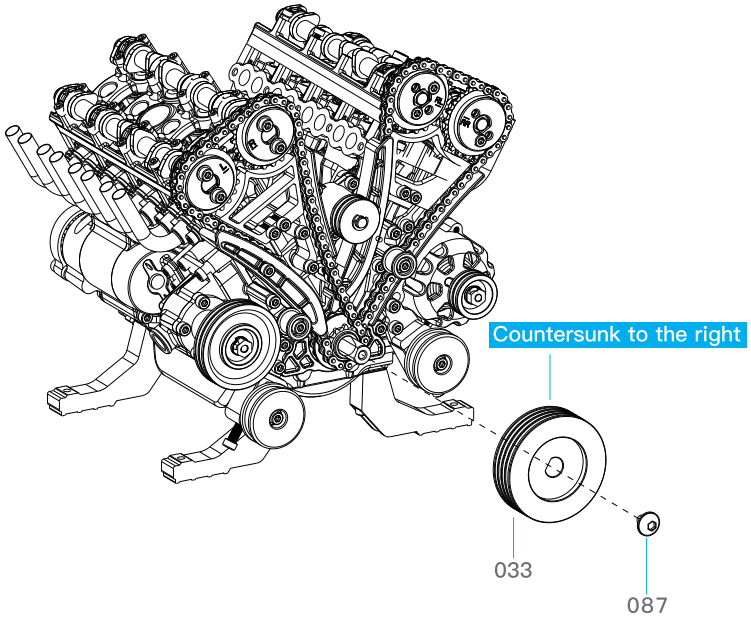

9.7 Belt installation

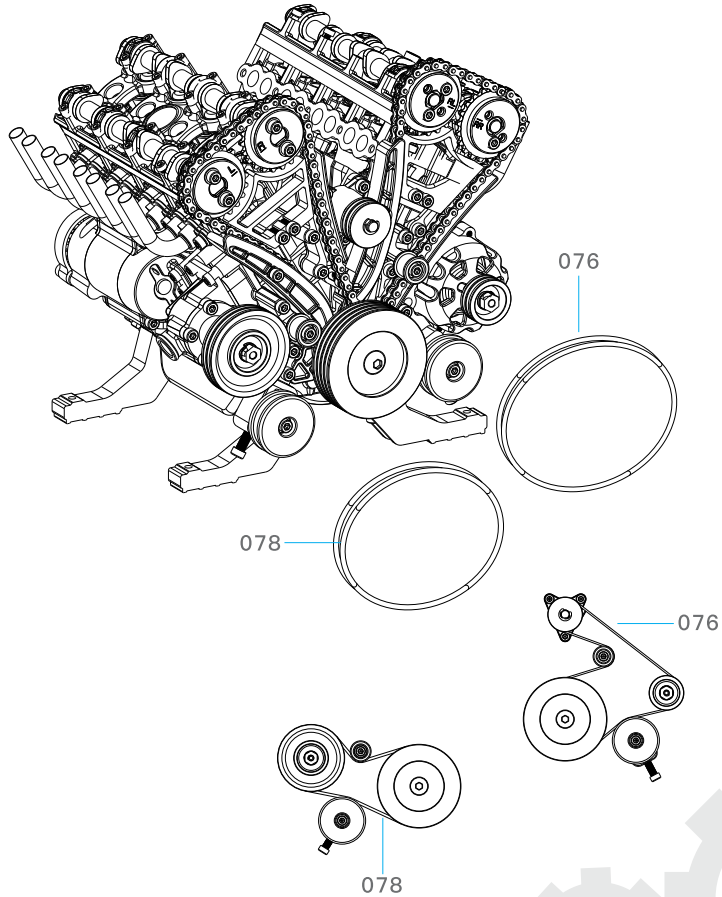

10 Other accessories

10.1 Oil filter installation

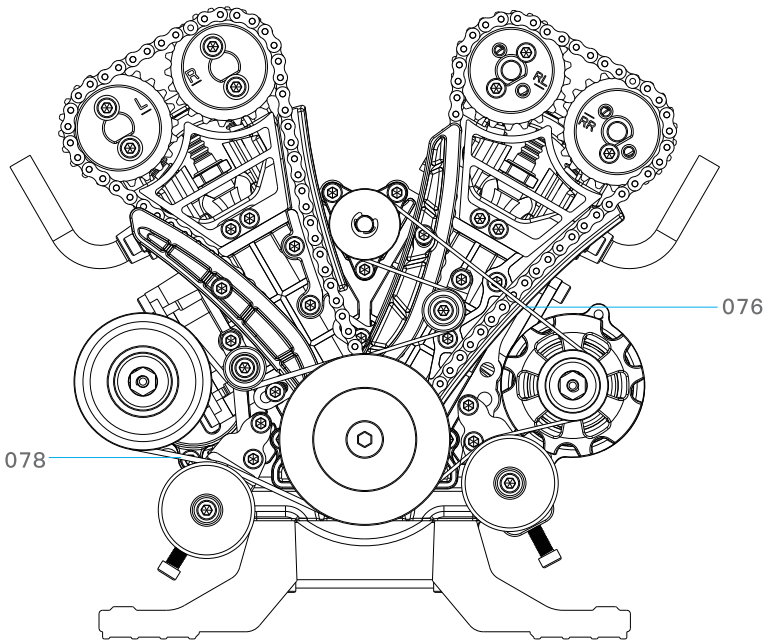

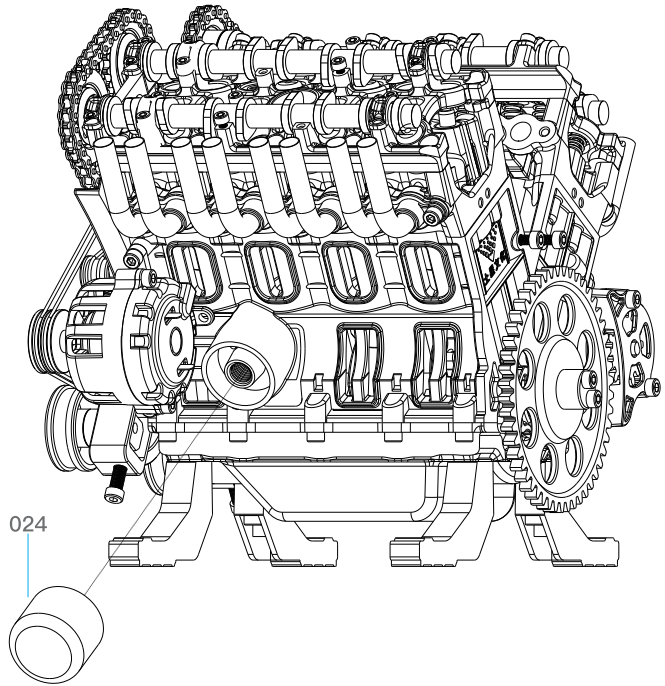

10.2 Intake manifold installation

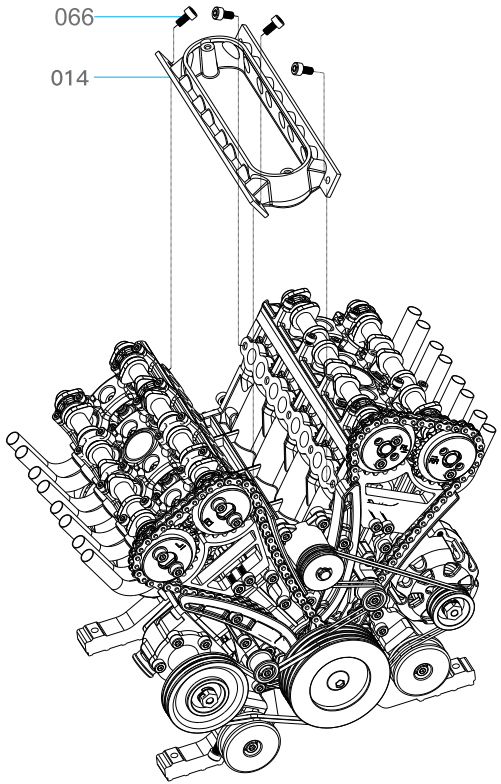

10.3 Intake manifold cap installation

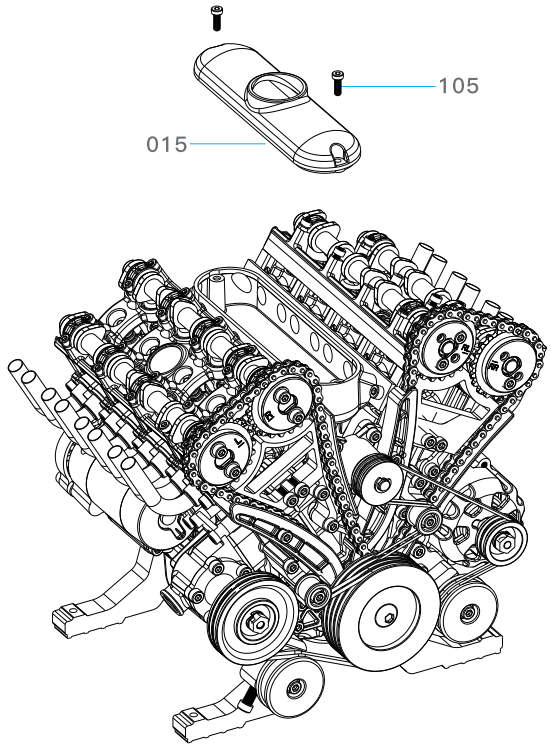

10.4 Assemble the circuit board box

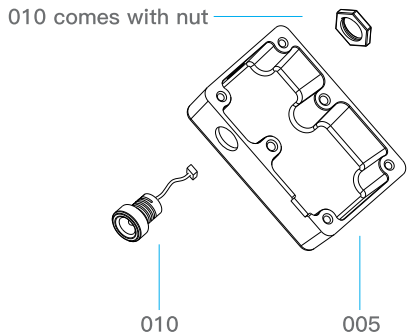

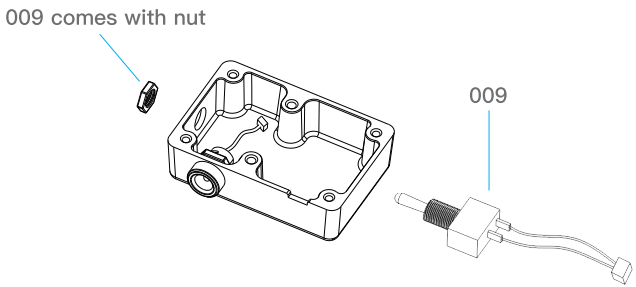

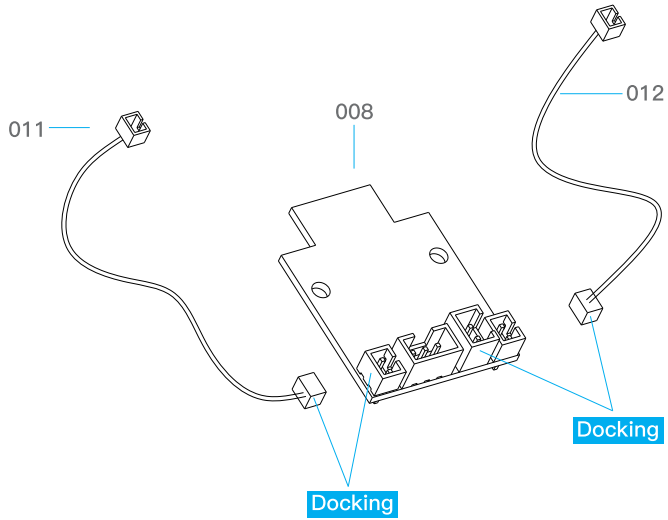

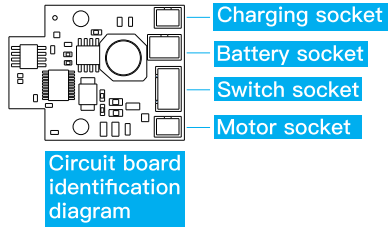

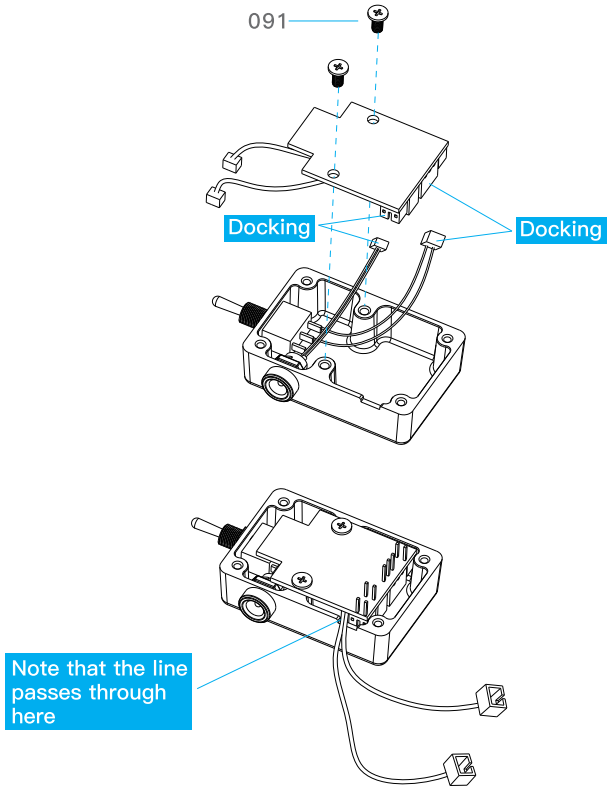
091
Docking
Docking
Note that the line passes through here

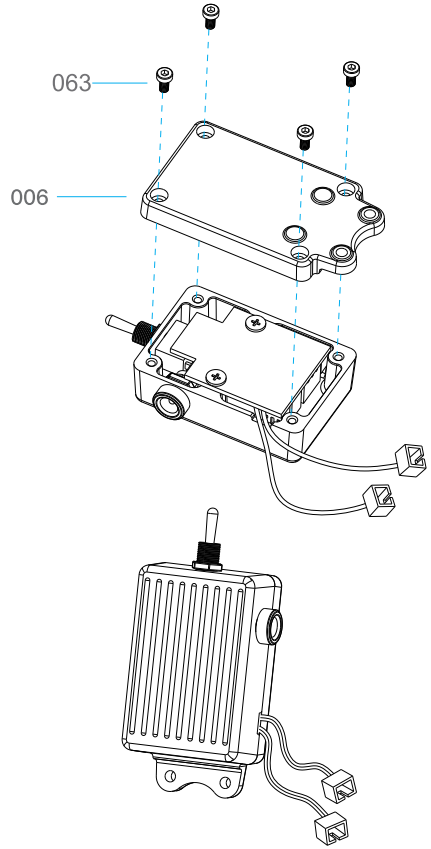
063
006

10.5 Circuit board box installation

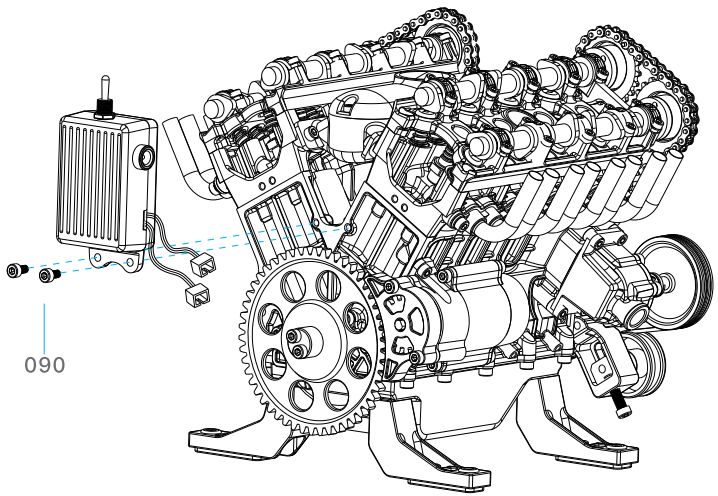

10.6 Battery box assembly

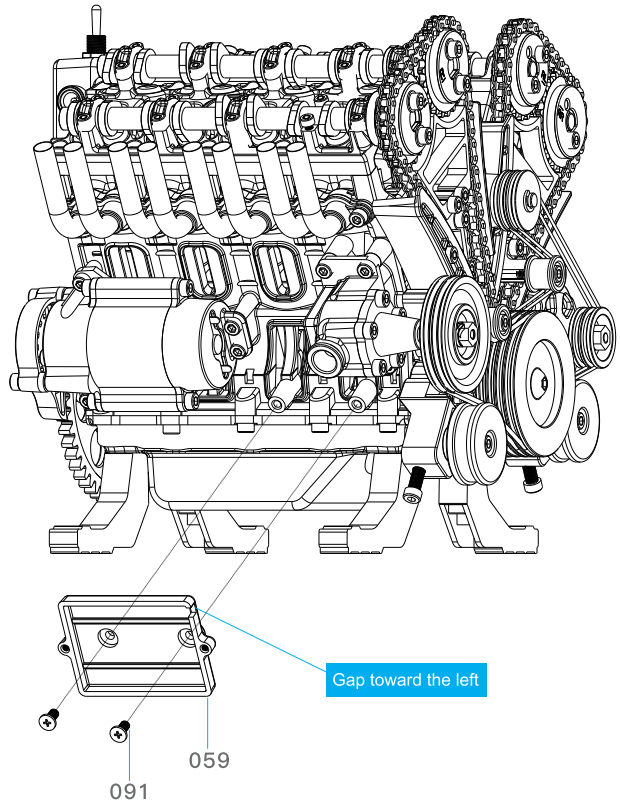

10.7 Battery box installation

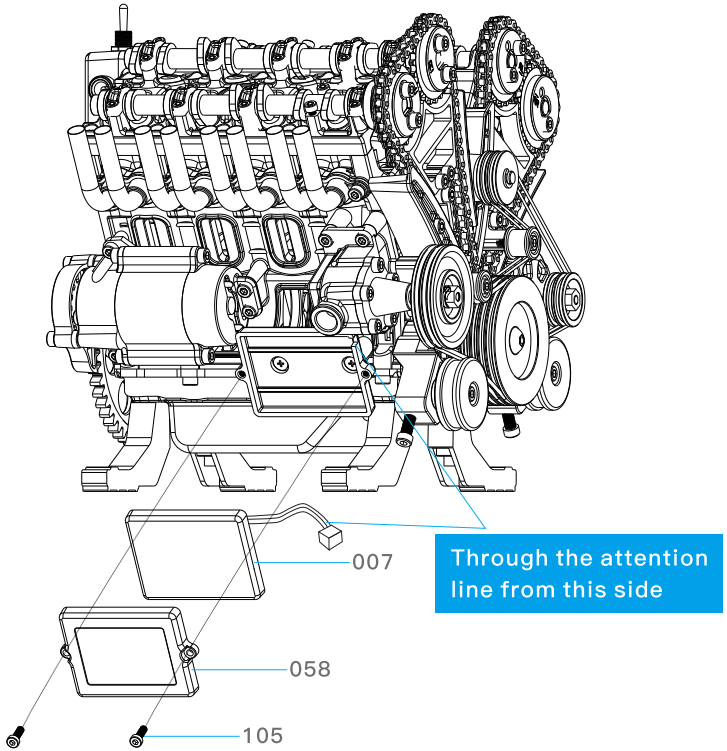

10.8 Connection cable

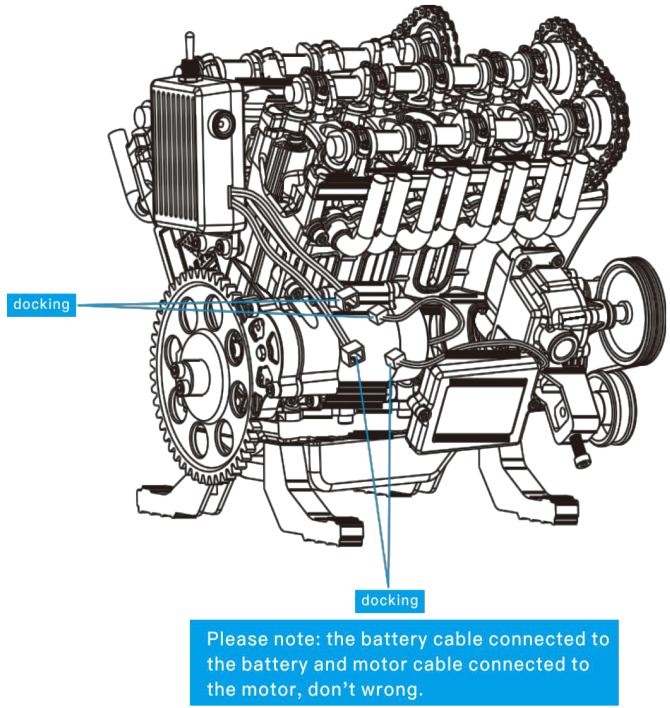

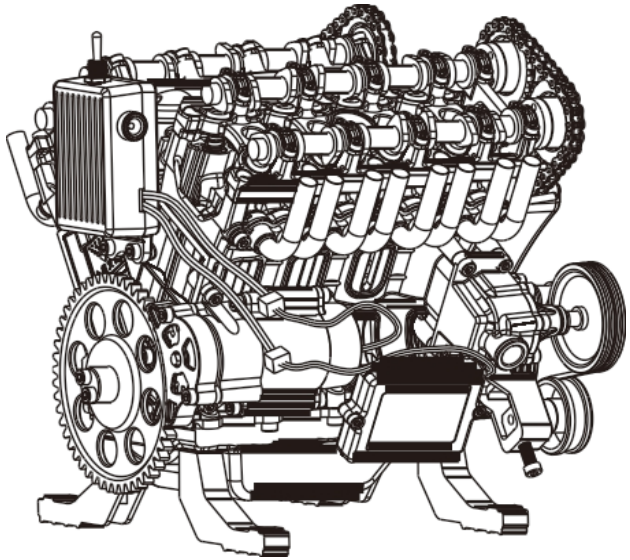

Assembled figure

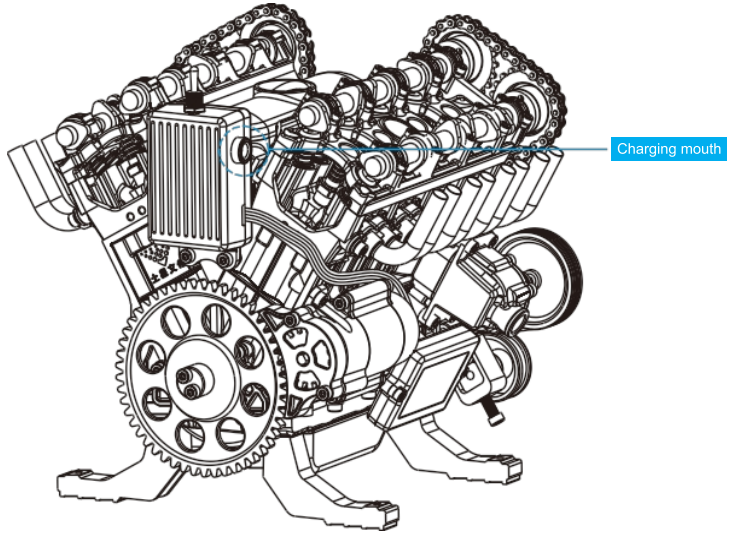

1. This product is equipped with a dedicated charging cable. The output DC voltage for the power adapter that user supplied is DC5V, and output DC current is not less than 1000mA. Do not use an adapter higher than 6V to charge the product.
2. Please refer to the precautions II battery and charging precautions in this manual.
3. Normal charging state.
   1: The red lamp is on during charging.
   2: The blue lamp is on when fully charged.
   3: The maximum charging time is 2 hours.

Troubleshooting

1: Mechanical troubleshooting

After the assembly is completed, please check the corresponding parts and checkit again according to the instructions. If there is any abnormality in the movement. Please follow the steps below to find and solve the problem.

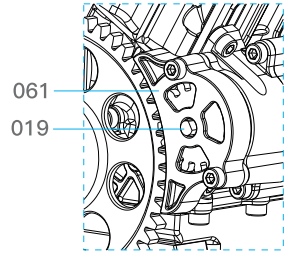

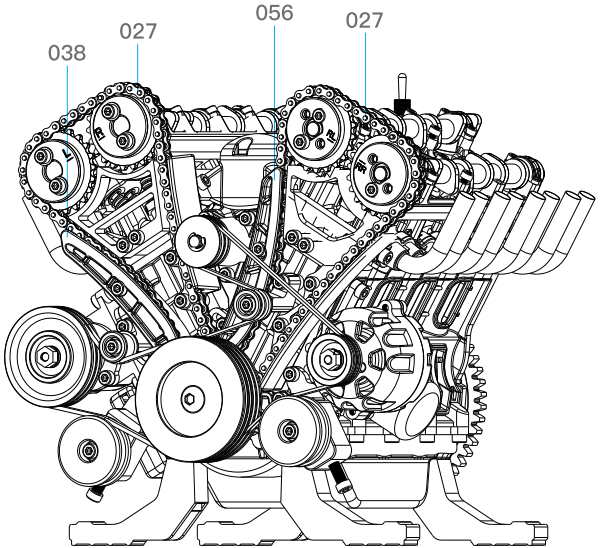

1>Whether the component installation direction is correct.
2> Whether the screws are tightened and loose
3> Check whether similar parts are reversed.
4> If there is an abnormality, you can loosen 038 and 056 adjust the screws of the chain tensioner adjust the tension to make the movement normal.
5> Check if 019 starts motor shaft movement no rubbing into the front cover of 061 starter motor heart hole. If the friction is enough to loosen 061start motor front cover screw for fine adjustment set.
6> If the 025 camshaft does not rotate smoothly, please remove it except 027 chain, rotate 025 convex by hand whether the wheel axis moves smoothly, if not,loosen the 063 screw by half a turn in the opposite direction.

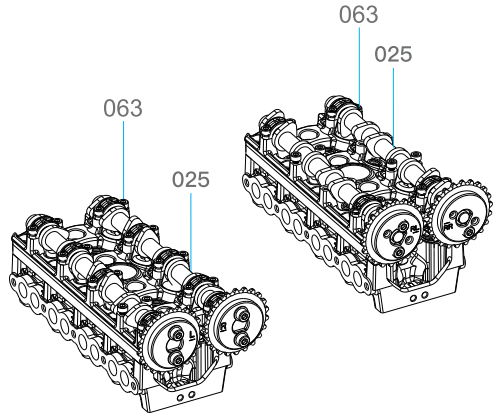

2: Electronic troubleshooting

1. Charging failure

Charger does not match

Solution:

Charge the product with a standard USB charger. The charger requires an output of 5V 1A (inclusive) or more.Use the USB head of TECHING's dedicated charging cable to plug into the USB port of the phone charger. Plug the round plug into the charging port of the product and charge it. As shown in Figure 1-1.

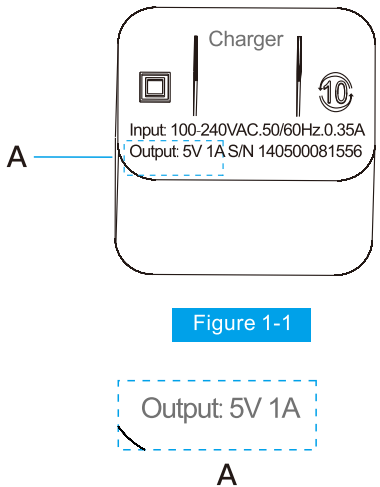

Figure 1-1

2. Charging cable round plug is inserted into the end

Solution:

Check whether the round plug of TECHING's special charging cable and the charging plug of the product are inserted into the end; As shown in Figure 1-2.

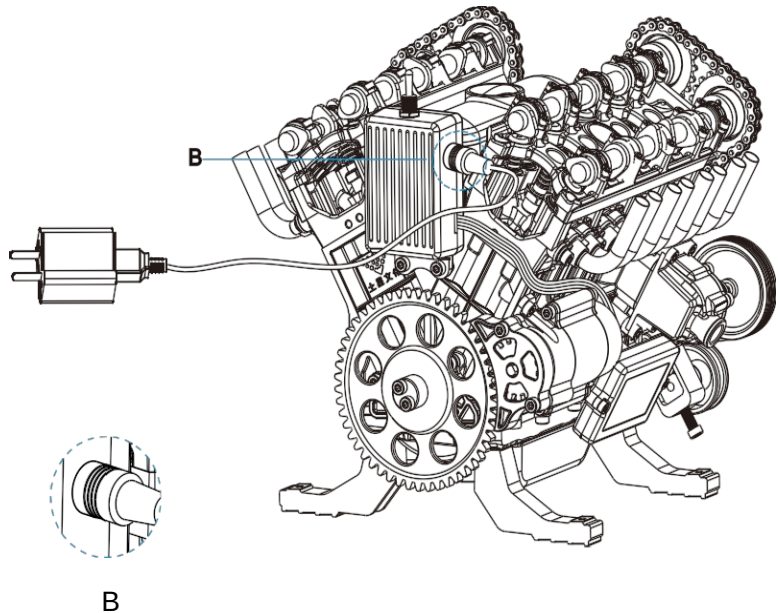

Figure 1-2

3. Wrong position of charging plug

Solution:

Remove the circuit board:
Make sure the charging plug is correctly inserted in the charging interface position DC5V of the circuit board. And then charge the product. Check the charging lamp indication on the circuit board. The read lamp is on during charging; blue light stays on when fully charged.
As shown in Image 1-3

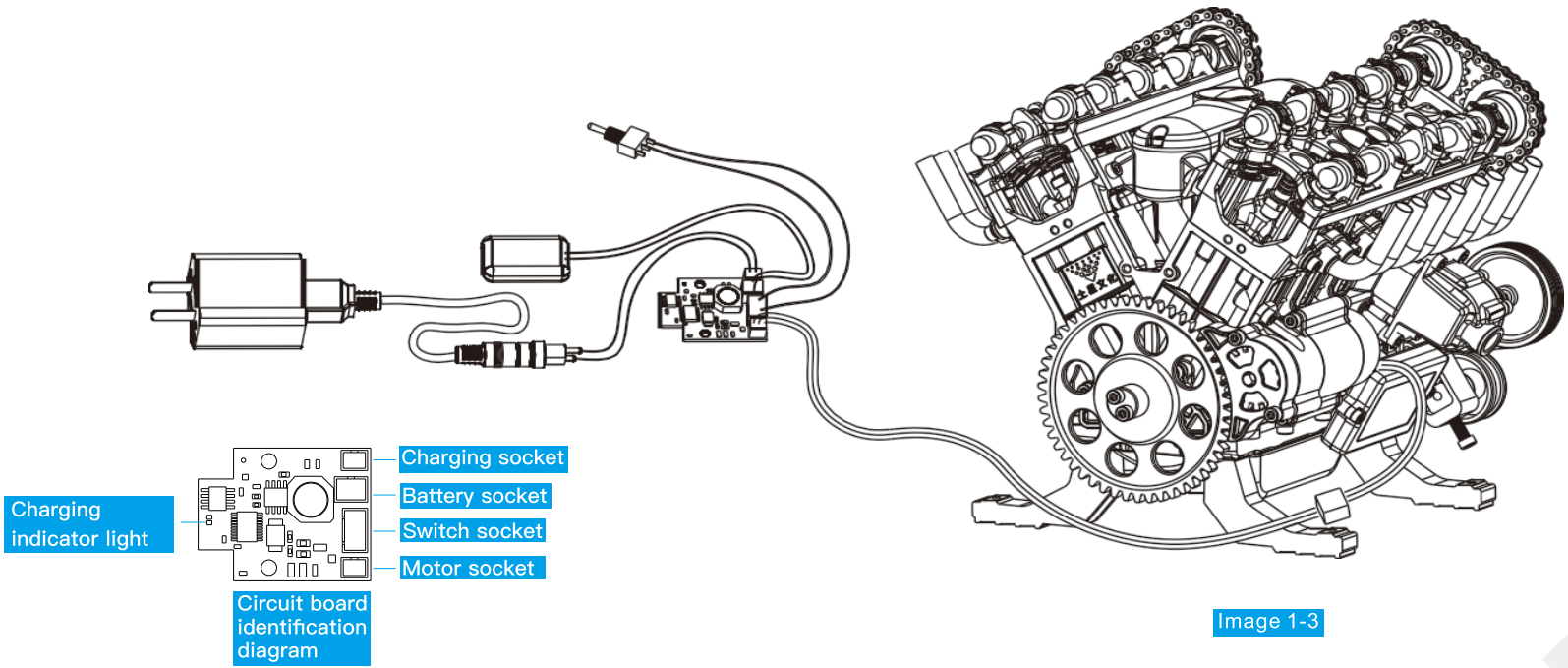

Image 1-3

2 The motor does not work

The battery is dead

Solution:

Use TECHING's dedicated charging cable to plug into the computer's USB port or the USB port of the mobile phone charger to charge the product. The red light is on when charging, and the blue light is on when fully charged. After fully charging, turn the power switch on and check if the motor can run normally. As shown in Figure 2-1

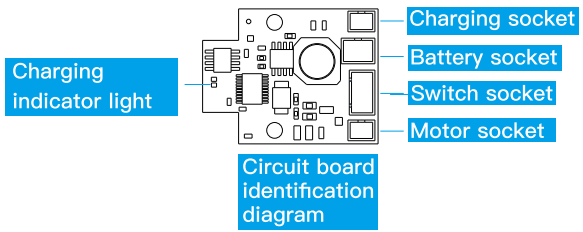

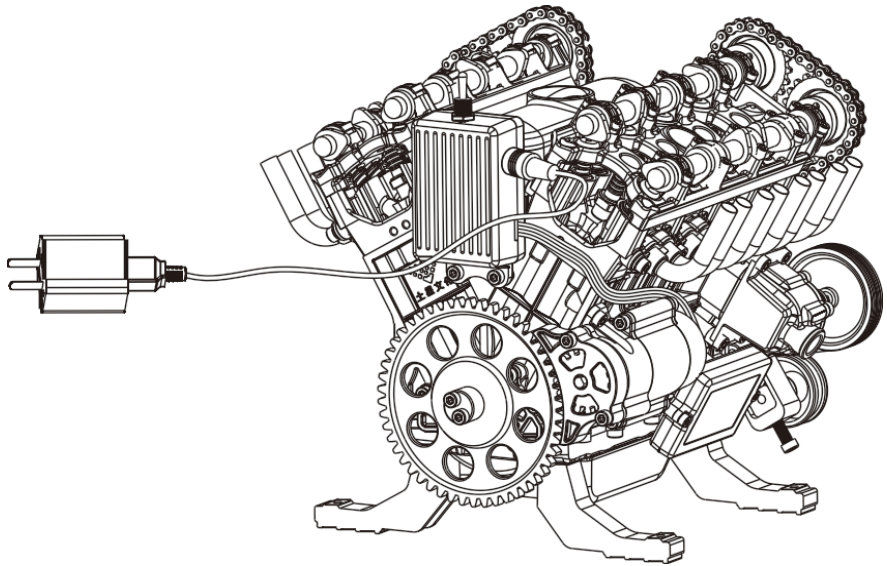

Image 2-1

2 Mechanical causes the motor does not rotate

Solution:

Remove the start gear of the motor then test whether the motor (A) can run smoothly. As shown in Image 2-2. Note: If it can run smoothly, check the mechanical part reason according to the mechanical troubleshooting method. If the motor still does not work, please consult our after-sales support or return to factory for repair.

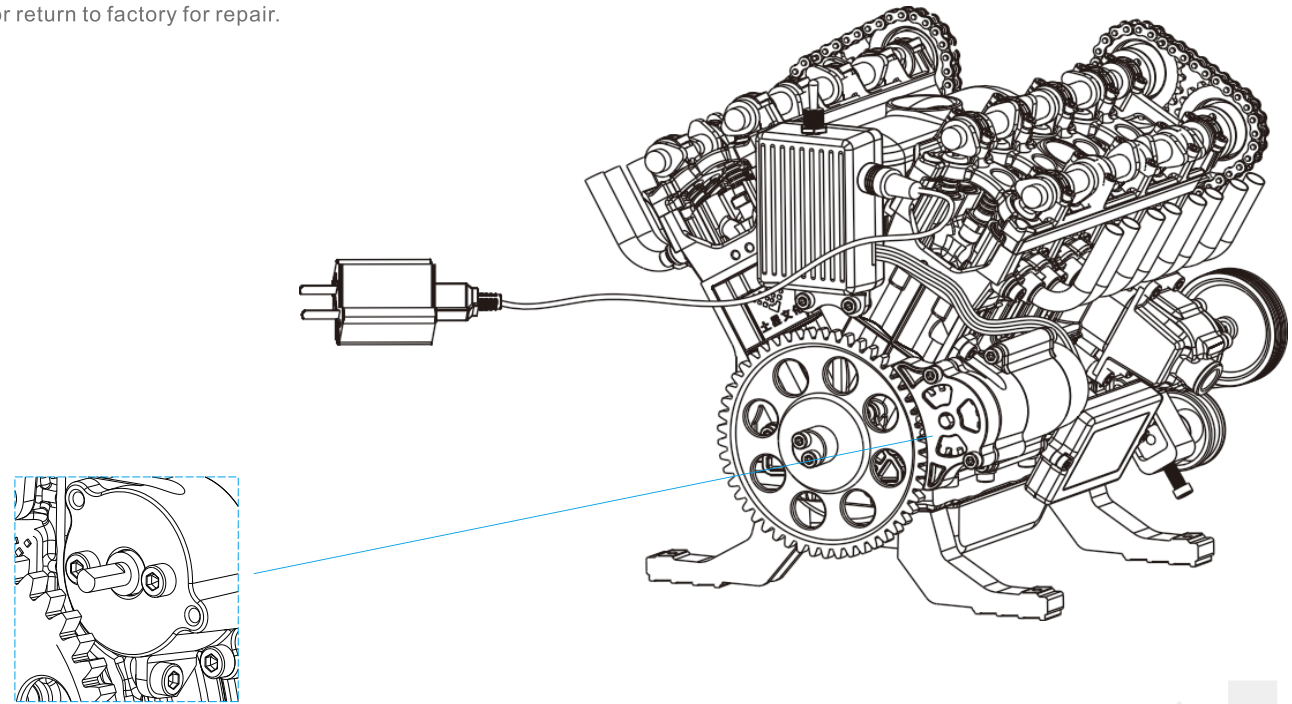

Image 2-2

3 Motor plug is inserted in the wrong position

Solution:

Check if the motor is in the right position, as shown in Image 2-3

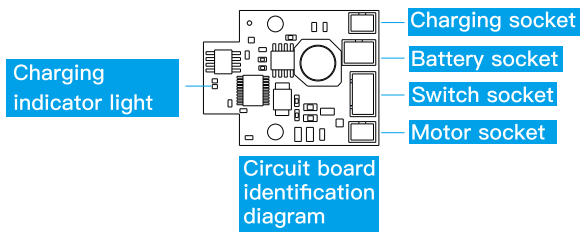

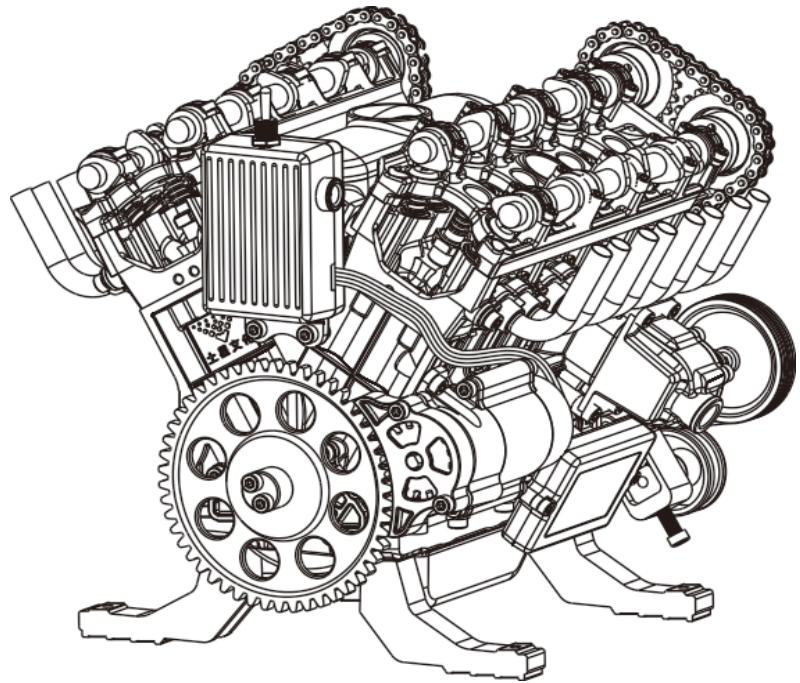

Image 2-3

No.	Parts picture	Part name	Qty.
001		Cylinder	1
002	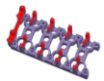	Cam seat	2
003		Cylinder head	2
004		Crankshaft	1
005		Circuit board box upper cover	1
006		Circuit board box lower cover	1
007		Battery	1
008		Circuit board	1

No.	Parts picture	Part name	Qty.
009		switch	1
010		Charging plug	1
011		Motor connection line	1
012		Battery connection line	1
013	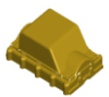	Oil pan	1
014		Intake manifold	1
015	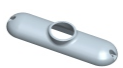	Intake manifold cap	1
016		Start center motor front cover	1

No.	Parts picture	Part name	Qty.
017		Start center motor middle cover	1
018		Start center motor back cover	1
019		Start center motor	1
020		Water pump box	1
021		Generator front cover	1
022		Generator back cover	1
023		generator	1
024		Oil filter	1

No.	Parts picture	Part name	Qty.
025		Camshaft	4 sets
026		piston	8
027		Timing chain	2
028		Engine bracket	4
029		Intake pipe	16
030		Piston connecting rod	8
031		Tension seat I	1
032		Tension seat II	1

No.	Parts picture	Part name	Qty.
033		Crankshaft pulley	1
034		Guide pulley bracket	1
035		Water pump end cover	1
036		Cam sprocket left	2
037		Cam sprocket right	2
038		Chain tensioner II	1
039		Chain guide block II	1
040		Tensioner	2

No.	Parts picture	Part name	Qty.
041		Water pump shaft	1
042		flywheel	1
043		Valve	32
044		Crankshaft bearing	5
045		Piston pin	8
046		Spark plug	8
047		Water pump pulley	1
048		Start central motor gear	1

No.	Parts picture	Part name	Qty.
049		Crankshaft synchronization sprocket gasket	1
050		Generator pulley	2
051		Camshaft spacer	2
052		Stop mat	1
053		Trachea holder	2
054		Rear cover	1
055		Front end cover	1
056		Chain tensioner	1

No.	Parts picture	Part name	Qty.
057		Chain guide block	1
058		800 battery box cover	1
059		bottom 800 battery	1
060		Synchronous sprocket stop	2
061		Start center motor front cover	1
062		Valve cap	32
063		M2.5X5 screw	46
064		Valve sleeve	32

No.	Parts picture	Part name	Qty.
065		Camshaft cover	20
066		M3X6 screw	90
067		Cam sprocket RL	1
068		Cam sprocket RR	1
069		Tension shaft	2
070		Water pump impeller	1
071		Tension block	2
072		Crankshaft synchronization sprocket	2

No.	Parts picture	Part name	Qty.
073		Guide wheel	2
074		Guide wheel sleeve	2
075		Guide wheel low bracket	1
076		Belt Ⅰ	2
077		Guide wheel high bracket	1
078		Belt Ⅱ	2
079		Guide pulley shaft	1
080		Water pump shaft sleeve	1

No.	Parts picture	Part name	Qty.
081		Ø8 O-ring	16
082		Connecting rod bearing	8
083		Valve spring	32
084		M3X20 screw	4
085		M2X8 screw	16
086		M3X12 screw	3
087		M4X6 screw with pad	1
088		M3X14 screw	13

No.	Parts picture	Part name	Qty.
089		M4X16 screw	2
090		M3X8 screw	8
091		CM3*6 screw	4
092		M3X25 screw	8
093		M3X5 screw	8
094		M5 circlip	1
095		M4 circlip	2
096		M5 gasket	1

No.	Parts picture	Part name	Qty.
097		M3*0.5 gasket	8
098		M3 circlip	16
099		2.0*15 positioning pin	1
100		M4 spring pad	2
101		M4*3 nut	2
102		2.0*20 positioning pin	1
103		M4 gasket	2
104		M3 spring pad	12

No.	Parts picture	Part name	Qty.
105		M2.5*8 screw	4
106		M3*10 screw	3

3 Warranty instruction

I. Warranty Instruction

Please carefully read the following warranty terms when purchasing this product so as to assure effective warranty for the product:

1. Since this product is for assembly experience, "7–day no–hassle return/change policy" is not available if no quality defect is found after unpacking. "7–day no–hassle return policy" is available if the package is not removed;
2. When this product is purchased, your dealer will assist you to write down your complete real information on the warranty card, when you should ask the dealer for effective invoice or purchase voucher; then, the invoice and voucher shall be properly kept;
3. Users who apply for warranty have to show their purchase invoices or effective "three guarantees" certificate. For users who lost their effective voices or "three guarantees" certificate and fail to provide their copies, the warranty period is one year from the 60th day after the manufacturing of machine;
4. The warranty object is the parts that are found with defects after purchase and before use. We provide paid services for parts damaged by improper use by users;
5. We reserve the right to interpret and modify the terms & conditions of after–sales service.

II. Items of After–sales Service and Warranty

1. The warranty period for motor, battery and circuit board is three months from the day on which they are received and accepted; the warranty period for other parts is one year from the day on which they are received and accepted;
2. The user who finds some part missed when purchasing a new machine could request the manufacturer to supply the missed part within 30 days after the purchase date on warranty card; the user has to purchase that part at Teching's official website after the said 30 days;
3. If the assembled product fails to run or run properly, the user could either consult the manufacturer for possible causes, or send the product back to the manufacturer for free testing or debugging;
4. We and our authorized agencies provide free technical advice or instruction for users who encounter any product problem;
5. All parts and accessories replaced within the scope of the warranty belong to our company. Users have to provide defective parts so that we can exchange them with new ones.

III. Items outside Scope of Warranty

1. Beyond the "three guarantees" period;
2. Damage is caused by failure to use, maintain and keep the product as per instruction manual;
3. Products that are not sold by us or our authorized sales outlets;
4. Those who hold no valid invoice or "three guarantees" certificate, or those who modify the after–sales service card without permission (except the case where the product is confirmed to be within the "three guarantees" period);
5. The product model or serial number on after–sales service card fail to match the commodity;
6. Damage caused by force majeure (e.g. flood, fire, earthquake, lightning strike, etc.);
7. Natural wear during the use of product, e.g. the problems arising from product gaps expansion, lubricating oil shortage, and battery aging, etc.;
8. For the faults (e.g. moisture invasion, dampness, breakage, external force extrusion, deformation and improper use, etc.) caused by other factors than product quality;
9. Dealers shall make agreement on warranty coverage; the situations outside this warranty agreement are not covered by the warranty.

Sales Service

1. Scan the Teching Assistant QR code for technical consultation;
2. Relevant technical information is available at Teching's official account;
3. You can call our hotline directly and consult our technician;
4. Technical consultation can be sent to us by mail;
5. Technical advice can be obtained from nearby authorized agencies;
6. You are encouraged to bring forward your comments and suggestions on our products and your expectations for new products in various manners.

Inspection number:

Sales service card

Account name: _____ Tel: _____

Product name: _____ Product No.: _____

Serial number of product: _____

Problem description: _____

_____

Service content:

- ☐ Part replenishment
- ☐ Testing service
- ☐ Part replacement
- ☐ Return and change of goods needed

Sales unit: _____

Place of sale: _____

Operator: _____ After–sales completion time: _____

Company:
Guangzhou Teching Cultural Development Co., Ltd.
Address:
Baosheng Building, Hongming Road,
Huangpu District, Guangzhou City, China
After–sales email: sales@techingedu.com.cn
Hotline: 0086-13924277386 4001-020-019

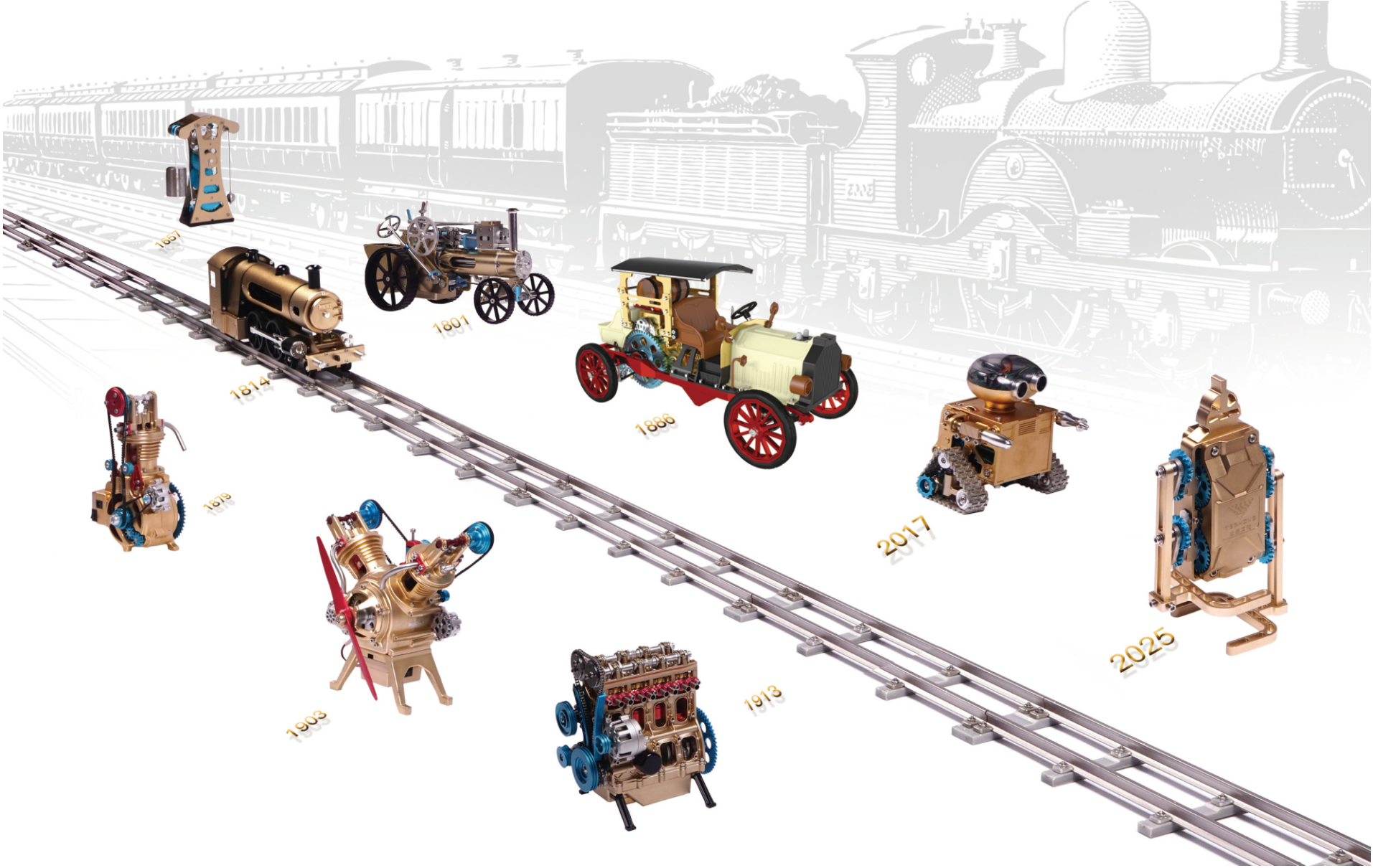
1814
1801
1886
2017
2025
1903
1913

Educational • Original design • Patented

TECHING
土星文化

Company: Guangzhou Teching Cultural Development Co.Ltd
Address: Bao sheng Building, Hong ming Road, Huangpu District, Guangzhou City, China.
Service Tel: 0086-13924277386 4001-020-019
http://www.techingedu.com

Official Website

Version NO:DM118-02