BLADE®

#1 BY DESIGN

330X

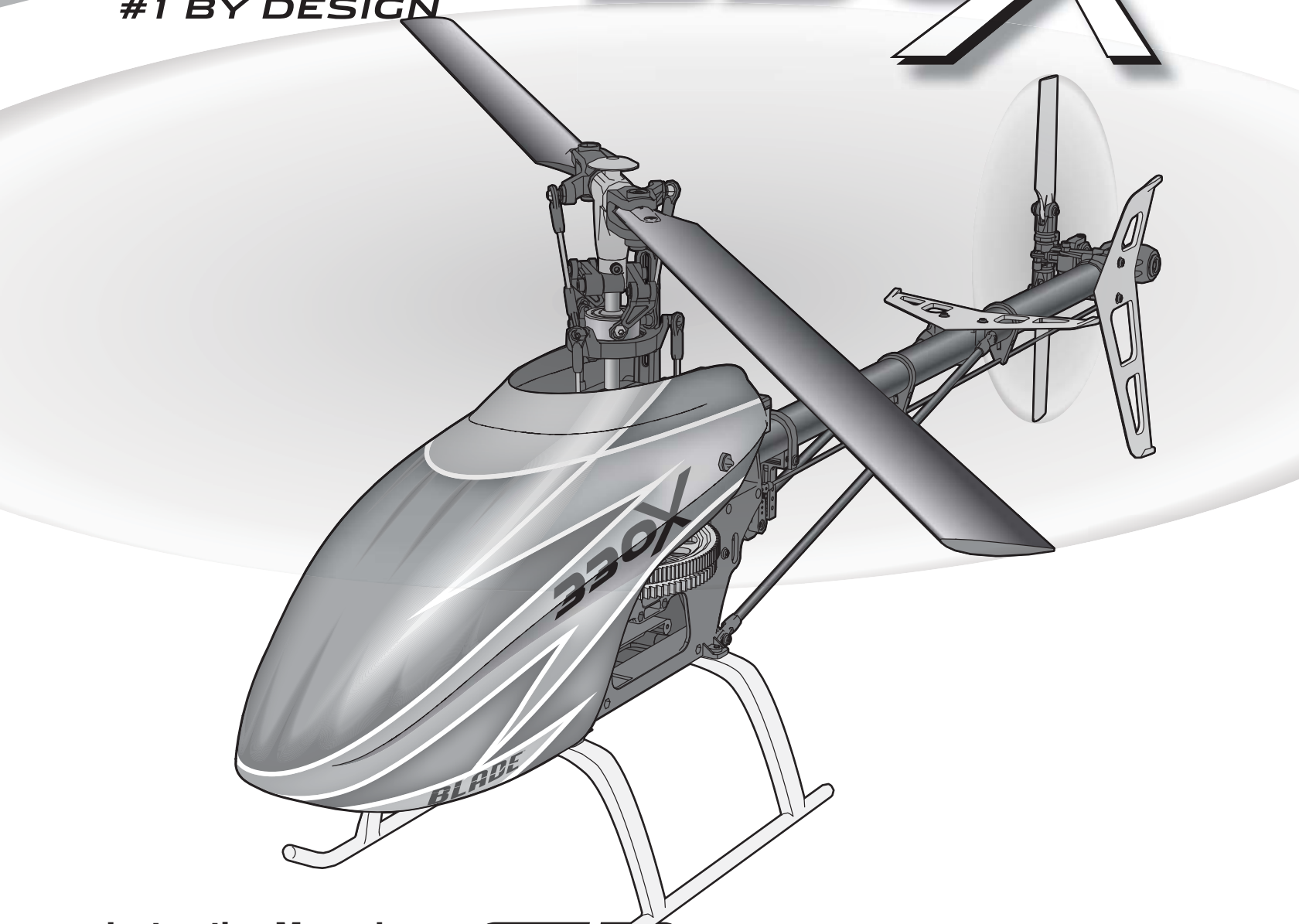

Instruction Manual
Bedienungsanleitung
Manuel d'utilisation
Manuale di Istruzioni

BNF® BASIC

RTF

AS3X®

NOTICE

All instructions, warranties and other collateral documents are subject to change at the sole discretion of Horizon Hobby, LLC. For up-to-date product literature, visit horizonhobby.com and click on the support tab for this product.

Meaning of Special Language

The following terms are used throughout the product literature to indicate various levels of potential harm when operating this product:
WARNING: Procedures, which if not properly followed, create the probability of property damage, collateral damage, and serious injury OR create a high probability of superficial injury.
CAUTION: Procedures, which if not properly followed, create the probability of physical property damage AND a possibility of serious injury.
NOTICE: Procedures, which if not properly followed, create a possibility of physical property damage AND a little or no possibility of injury.

WARNING: Read the ENTIRE instruction manual to become familiar with the features of the product before operating. Failure to operate the product correctly can result in damage to the product, personal property and cause serious injury.
This is a sophisticated hobby product. It must be operated with caution and common sense and requires some basic mechanical ability. Failure to operate this Product in a safe and responsible manner could result in injury or damage to the product or other property. This product is not intended for use by children without direct adult supervision. Do not use with incompatible components or alter this product in any way outside of the instructions provided by Horizon Hobby, LLC. This manual contains instructions for safety, operation and maintenance. It is essential to read and follow all the instructions and warnings in the manual, prior to assembly, setup or use, in order to operate correctly and avoid damage or serious injury.

Age Recommendation: Not for children under 14 years. This is not a toy.

Safety Precautions and Warnings

- Always keep a safe distance in all directions around your model to avoid collisions or injury. This model is controlled by a radio signal subject to interference from many sources outside your control. Interference can cause momentary loss of control.
- Always operate your model in open spaces away from full-size vehicles, traffic and people.
- Always carefully follow the directions and warnings for this and any optional support equipment (chargers, rechargeable battery packs, etc.).
- Always keep all chemicals, small parts and anything electrical out of the reach of children.
- Always avoid water exposure to all equipment not specifically designed and protected for this purpose. Moisture causes damage to electronics.
- Never place any portion of the model in your mouth as it could cause serious injury or even death.
- Never operate your model with low transmitter batteries.
  Always keep aircraft in sight and under control.
- Always move the throttle fully down at rotor strike.
- Always use fully charged batteries.
- Always keep transmitter powered on while aircraft is powered.
- Always remove batteries before disassembly.
- Always keep moving parts clean.
- Always keep parts dry.
- Always let parts cool after use before touching.
- Always remove batteries after use.
- Never operate aircraft with damaged wiring.
- Never touch moving parts.

WARNING AGAINST COUNTERFEIT PRODUCTS: If you ever need to replace a Spektrum component found in a Horizon Hobby product, always purchase from Horizon Hobby, LLC or a Horizon Hobby authorized dealer to ensure authentic high-quality Spektrum product. Horizon Hobby, LLC disclaims all support and warranty with regards, but not limited to, compatibility and performance of counterfeit products or products claiming compatibility with DSM or Spektrum technology.

BLADE® 330X

Box Contents:
- Blade 330X
- 3S 11.1V 2200mAh 30C Li-Po Battery (RTF Only)
- DC Li-Po Balancing Charger (RTF Only)
- Spektrum DXe Transmitter (RTF Only)
- 4 AA Batteries (RTF Only)

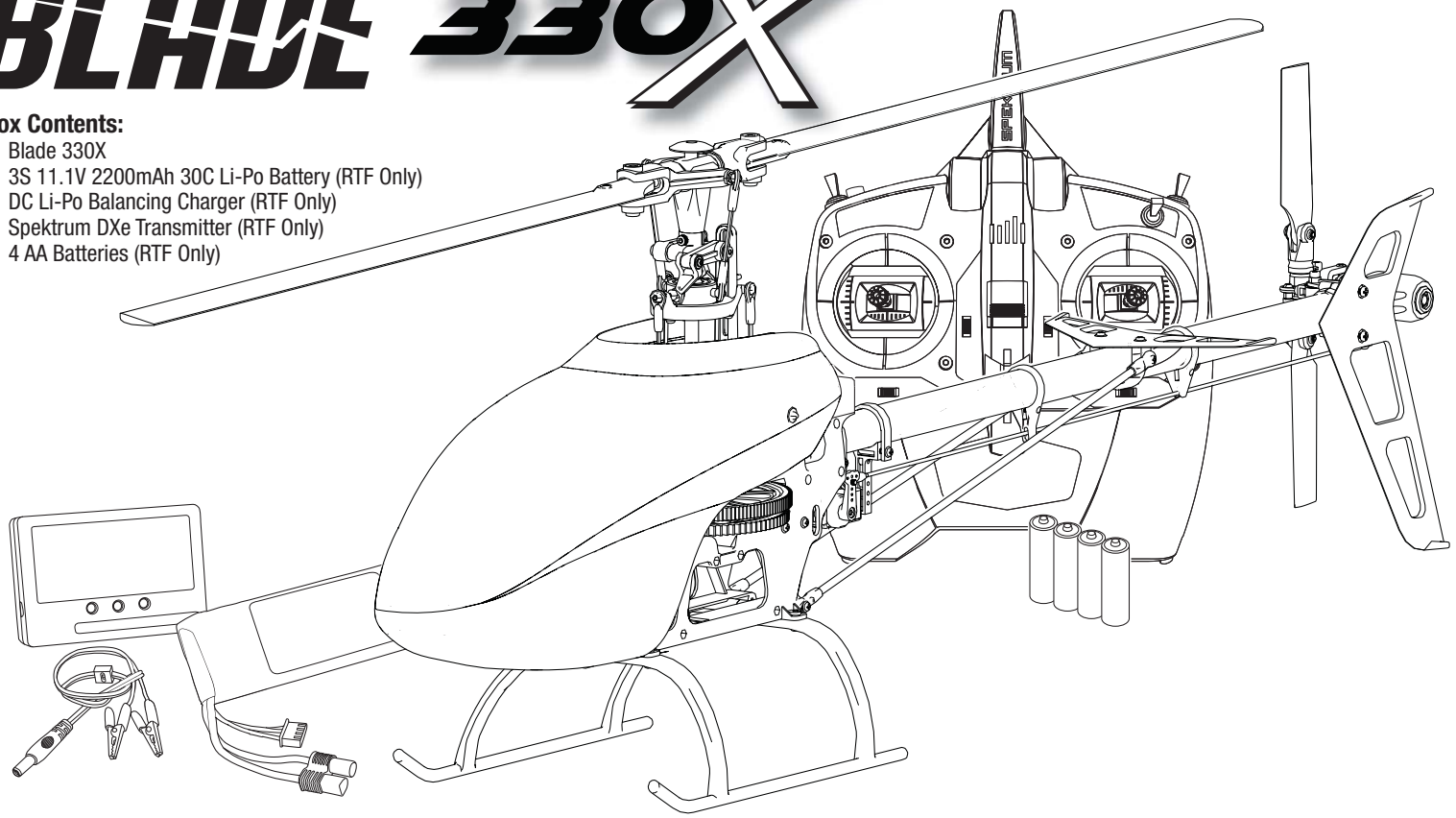

Table of Contents

Safety Precautions and Warnings 2
Table of Contents 3
First Flight Preparation 4
Flying Checklist 4
Charging Warnings 4
Battery Charging 4
LED Indications 4
DXe Transmitter Control (RTF) 5
Transmitter Setup (BNF) 5
Installing the Flight Battery 7
Transmitter and Receiver Binding 7
Throttle Hold 7
Control Tests 8
Understanding the Primary Flight Controls 9
Pre-Flight Checklist 9
Pre-Flight Checklist 10
Flying the Blade 330X Helicopter 10
Gyro Gain Adjustment 10
Tail Belt Tension 10
Post-Flight Inspections and Maintenance 11
Advanced Settings 11
Servo Adjustment 13
Troubleshooting Guide 14
Limited Warranty 14
Warranty and Service Contact Information 15
Exploded View 58
Parts List 60
Optional Parts 62

Specifications			
Length	34.3 in (870mm)	**Tail Rotor Diameter**	6.1 in (155mm)
Height	8.8 in (225mm)	**Flying Weight**	25.3 oz (717 g)
Main Rotor Diameter	28.5 in (725mm)		

Components			
Airframe	Blade® 330 X	**Charger**	DC Li-Po Balancing Charger (RTF Only)
Motor	440H Brushless Outrunner, 4200Kv	**Transmitter**	Spektrum DXe Transmitter (RTF Only)
Receiver	BLH4002 Receiver and Flybarless Controller for 330X	**Swash Servos**	Spektrum H3050 Sub-Micro Digital Heli Cyclic MG Servo
ESC	45-Amp (BLH5052)	**Tail Servo**	Spektrum H3060 Sub-Micro Digital Heli Tail MG Servo
Battery	3S 11.1V 2200mAh 30C Li-Po		

To register your product online, visit www.bladehelis.com

If you own this product, you may be required to register with the FAA. For up-to-date information on how to register with the FAA, please visit https://registermyuas.faa.gov/. For additional assistance on regulations and guidance on UAS usage, visit knowbeforeyoufly.org/.

First Flight Preparation

- Remove and inspect contents
- Begin charging the flight battery
- Install the flight battery in the helicopter (once it has been fully charged)
- Program your computer transmitter
- Bind your transmitter (BNF only)
- Familiarize yourself with the controls
- Find a suitable area for flying

Flying Checklist

- ❏ Always turn the transmitter on first
- ❏ Plug the flight battery into the lead from the ESC
- ❏ Allow the ESC to initialize and arm properly
- ❏ Fly the model
- ❏ Land the model
- ❏ Unplug the flight battery from the ESC
- ❏ Always turn the transmitter off last

Charging Warnings

The Battery Charger (EFLC3115) included with your helicopter has been designed to safely charge the Li-Po battery.

NOTICE: All instructions and warnings must be followed exactly. Mishandling of Li-Po batteries can result in a fire, personal injury and/or property damage.

- **NEVER LEAVE CHARGING BATTERIES UNATTENDED.**
- **NEVER CHARGE BATTERIES OVERNIGHT.**
- By handling, charging or using the included Li-Po battery, you assume all risks associated with lithium batteries.
- If at any time the battery begins to balloon or swell, discontinue use immediately. If charging or discharging, discontinue and disconnect. Continuing to use, charge or discharge a battery that is ballooning or swelling can result in fire.
- Always store the battery at room temperature in a dry area for best results.
- Always transport or temporarily store the battery in a temperature range of 40–120º F (5–49° C). Do not store battery or model in a car or direct sunlight. If stored in a hot car, the battery can be damaged or even catch fire.
- Always charge batteries away from flammable materials.
- Always inspect the battery before charging.
- Always disconnect the battery after charging, and let the charger cool between charges.
- Always constantly monitor the temperature of the battery pack while charging.
- ONLY USE A CHARGER SPECIFICALLY DESIGNED TO CHARGE LI-PO BATTERIES. Failure to charge the battery with a compatible charger may cause a fire resulting in personal injury and/or property damage.
- Never discharge Li-Po cells to below 3V under load.
- Never cover warning labels with hook and loop strips.
- Never leave charging batteries unattended.
- Never charge batteries outside recommended levels.
- Never charge damaged batteries.
- Never attempt to dismantle or alter the charger.
- Never allow minors to charge battery packs.
- Never charge batteries in extremely hot or cold places (recommended between 40–120° F or 5–49° C) or place in direct sunlight.

Battery Charging

⚠ **CAUTION:** Only charge batteries that are cool to the touch and are not damaged. Look at the battery to make sure it is not damaged e.g., swollen, bent, broken or punctured.

NOTICE: Always connect cable polarities correctly.

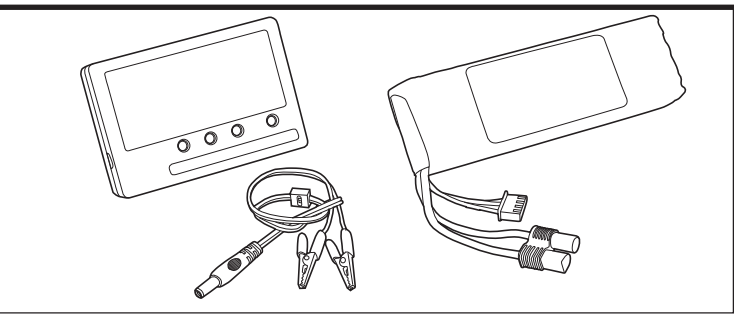

The Battery Charging Process
1. Connect the charger to a 12V power source, noting proper polarity.
2. The **CHARGE STATUS** LED glows solid red.
3. Connect the battery balance lead to the charger. The balance connector is keyed to prevent reverse polarity.
4. The **CELL STATUS** LEDs glow solid green or yellow and the **CHARGE STATUS** LED glows solid red when the battery is charging.
5. Charging is complete when all LEDs glow solid red.
6. Always unplug the battery from the charger immediately upon completion of charging. ⚠ **CAUTION**: Overcharging a battery can cause a fire.

LED Indications

Cell Status LEDs	Charge Status LED	Instruction
Red Solid	Red Flashing	Battery charger is powered. Li-Po battery is not connected
Green Solid	Red Solid	Li-Po battery is connected and charging
Yellow Solid	Red Solid	Charger is balancing the battery pack cells
Red Solid	Red Solid	Li-Po battery is connected and charging is complete
Red and Green Flashing	Red Solid	Charge Error

Installing the DXe Transmitter Batteries (RTF)

The LED indicator flashes and the transmitter beeps progressively faster as the battery voltage drops.

Replace the transmitter batteries when the transmitter begins to beep.

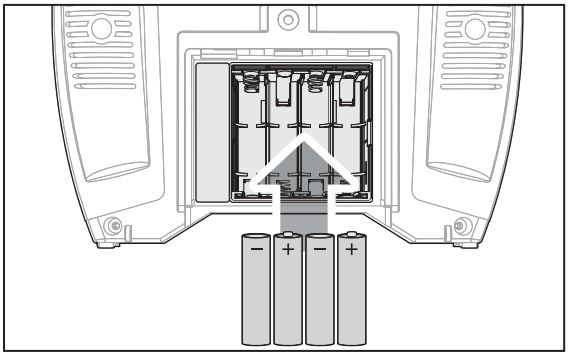

DXe Transmitter Control (RTF)

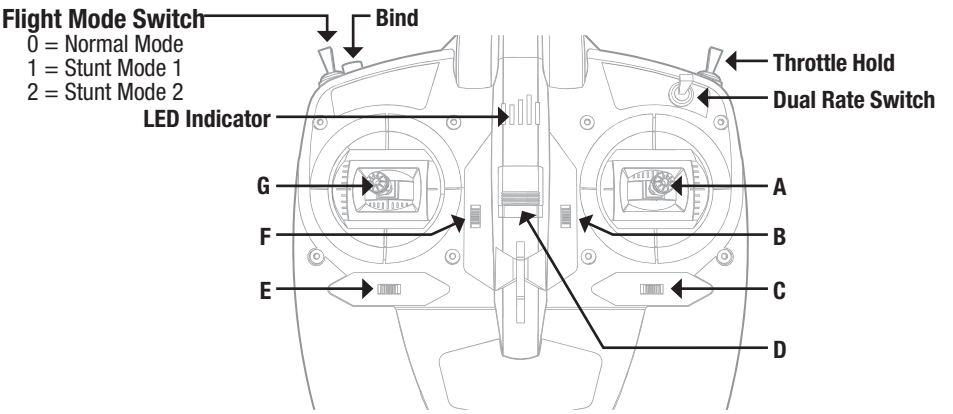

	A	B	C	D	E	F	G
Mode 1	**Aileron** (Left/Right) **Throttle** (Up/Down)	**Throttle Trim**	**Aileron Trim**	**ON/OFF Switch**	**Rudder Trim**	**Elevator Trim**	**Rudder** (Left/Right) **Elevator** (Up/Down)
Mode 2	**Aileron** (Left/Right) **Elevator** (Up/Down)	**Elevator Trim**	**Aileron Trim**	**ON/OFF Switch**	**Rudder Trim**	**Throttle Trim**	**Rudder** (Left/Right) **Throttle** (Up/Down)

Transmitter Setup (BNF)

Program your transmitter before attempting to bind or fly the helicopter. Transmitter programming values are shown below for the Spektrum DX6i, DX7s, DX6, DX7, DX8, DX9, DX18 and DX20.

The files for transmitters using Spektrum AirWare™ are also available for download online at *www.spektrumrc.com.*

DXe

To use a Spektrum™ DXe transmitter other than the one included in the RTF version, download the Blade® 330 X DXe model setup available at *www.spektrumrc.com* or use the appropriate programming cable and the PC or mobile app to program the transmitter.

DX6i

SETUP LIST

Model Type	HELI
Swash Type	1 servo Normal

REVERSE	
Channel	Direction
THRO	N
AILE	N
ELEV	N
RUDD	N
GYRO	N
PITC	R

Modulation Type
AUTO DSMX-ENABLE

D/R COMBI	
D/R SW	AILE

Timer	
Down Timer	4:00
Switch	THR CUT

ADJUST LIST

TRAVEL ADJ	
Channel	Travel
THRO	100/100
AILE	100/100
ELEV	100/100
RUDD	100/100
GYRO	100/100
PITC	100/100

D/R & Expo			
Chan	Sw Pos	D/R	Expo
AILE	0	100	0
	1	85	0
ELEV	0	100	0
	1	85	0
RUDD	0	100	0
	1	85	0

Throttle Curve					
Switch Pos (F Mode)	Pos 1	Pos 2	Pos 3	Pos 4	Pos 5
NORM	0	50	50	50	50
STUNT*	65	65	65	65	65

GYRO			
RATE	SW-F.MODE		
0	60%	NORM	0
1	50%	STUNT	1

Pitch Curve					
Switch Pos (F Mode)	Pos 1	Pos 2	Pos 3	Pos 4	Pos 5
NORM	25	37	50	75	100
STUNT	0	25	50	75	100
HOLD	25	37	50	75	100

DX7s, DX8

SYSTEM SETUP

Model Type	HELI
Swash Type	1 servo 90

F-Mode Setup	
Flight Mode	F Mode
Hold	Hold

SW Select	
Trainer	Aux 2
F Mode	Gear
Gyro	INH
Mix	INH
Hold	INH
Knob	INH

Frame Rate
11ms
DSMX

FUNCTION LIST

Servo Setup

Chan	Travel	Reverse
THR	100/100	Normal
AIL	100/100	Normal
ELE	100/100	Normal
RUD	100/100	Normal

Chan	Travel	Reverse
GER	100/100	Normal
PIT	100/100	Normal
AX2	100/100	Normal

Timer	
Mode	Count Down
Time	4:00 Tone
Start	Throttle Out
Over	25%

D/R & Expo

Chan	Switch Pos (Ail D/R)	D/R	Expo
AILE	0	100/100	0
	1	85/85	0
	2	85/85	0
ELEV	0	100/100	0
	1	85/85	0
	2	85/85	0
RUDD	0	100/100	0
	1	85/85	0
	2	85/85	0

Throttle Curve

Switch Pos (F Mode)	Pt 1	Pt 2	Pt 3	Pt 4	Pt 5
N	0	50	50	50	50
1	55	55	55	55	55
2	65	65	65	65	65

Pitch Curve

Switch Pos (F Mode)	Pt 1	Pt 2	Pt 3	Pt 4	Pt 5
N	25	37	50	75	100
1	0	25	50	75	100
2	0	25	50	75	100
HOLD	25	37	50	75	100

Throttle Hold

Throttle	0%

DX6G2, DX6e, DX7G2, DX8G2, DX9, DX18, DX20

SYSTEM SETUP

Model Type	HELI
Swash Type	Normal

F-Mode Setup		
Switch 1	Switch B	
Switch 2	Inhibit	
Hold Switch	Switch H	
	0	1

Channel Assign	
Channel Input Config	
1 Throttle	
2 Aileron	
3 Elevator	
4 Rudder	
5 Gear	Switch B
6 Collective	
7 AUX 2*	Switch I

Frame Rate
11ms*
DSMX

* Function is not available on all transmitters

FUNCTION LIST

Servo Setup

Chan	Travel	Reverse
THR	100/100	Normal
AIL	100/100	Normal
ELE	100/100	Normal
RUD	100/100	Normal
GER	100/100	Normal

Chan	Travel	Reverse
PIT	100/100	Normal
AX2*	100/100	Normal
AX3*	100/100	Normal
AX4*	100/100	Normal

Timer	
Mode	Count Down
Time	4:00
Start	Throttle Out
Over	25%
One Time	Inhibit

D/R & Expo

Chan	Sw (F) Pos	D/R	Expo
AILE	0	100/100	0
	1	85/85	0
	2	85/85	0
ELEV	0	100/100	0
	1	85/85	0
	2	85/85	0
Rudd	0	100/100	0
	1	85/85	0
	2	85/85	0

Throttle Curve

Sw (B) Pos	Pt 1	Pt 2	Pt 3	Pt 4	Pt 5
N	0	50	50	50	50
1	55	55	55	55	55
2	65	65	65	65	65
Hold	0	0	0	0	0

Pitch Curve

Sw (B) Pos	Pt 1	Pt 2	Pt 3	Pt 4	Pt 5
N	25	37	50	75	100
1	0	25	50	75	100
2	0	25	50	75	100
HOLD	25	37	50	75	100

Gyro

Normal	85.0%
Stunt 1	80.0%
Stunt 2	75.0%
Hold	85.0%
Channel	Gear
Switch	Flight Mode

Installing the Flight Battery

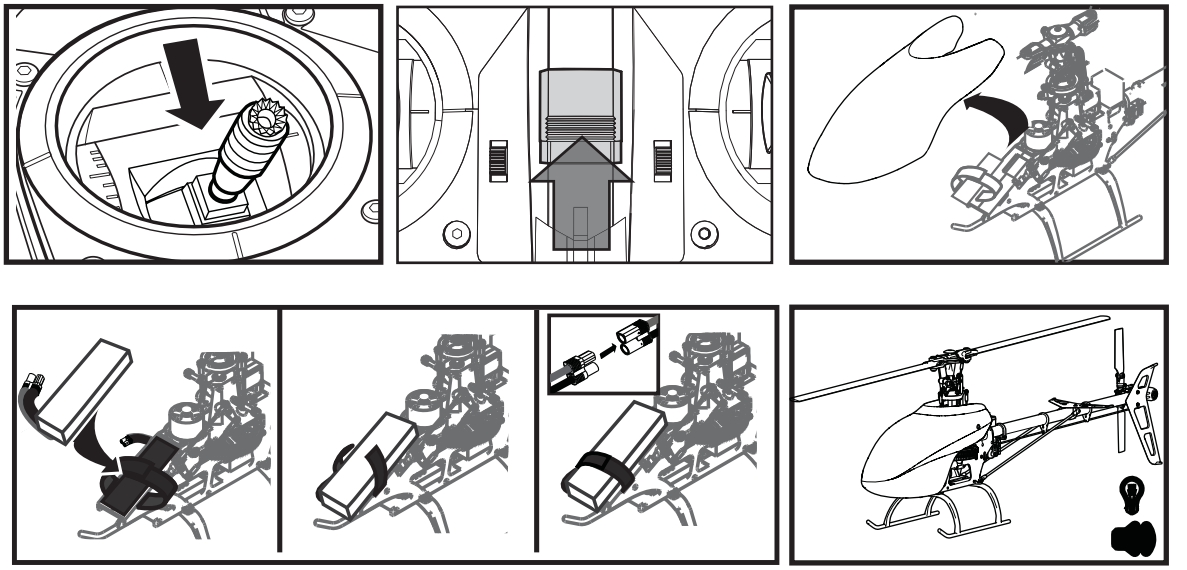

1. Lower the throttle.
2. Power on the transmitter.
3. Center the throttle trim.
4. To allow the ESC to arm and to keep rotors from initiating at startup, turn on throttle hold and normal flight mode before connecting the flight battery.
5. Attach hook material to the helicopter frame and loop material to the battery.
6. Install the flight battery on the helicopter frame. Secure the flight battery with a hook and loop strap. Connect the battery cable to the ESC.
7. Do not move the helicopter until the receiver initializes. The swashplate will center, indicating that the unit is ready. The receiver will also emit a solid orange Status LED when it is ready.
8. The helicopter motor will emit 2 ascending tones, indicating the ESC is armed.

CAUTION: Always disconnect the Li-Po battery from the ESC power lead when not flying to avoid over-discharging the battery. Batteries discharged to a voltage lower than the lowest approved voltage may become damaged, resulting in loss of performance and potential fire when batteries are charged.

Transmitter and Receiver Binding

Binding is the process of programming the receiver to recognize the GUID (Globally Unique Identifier) code of a single specific transmitter. You need to 'bind' your chosen Spektrum™ DSM2/DSMX technology equipped aircraft transmitter to the receiver for proper operation.

Binding Procedure
1. Program your transmitter using the Transmitter Setup found in this manual.
2. Insert the bind plug in the BND/DAT port on the receiver.
3. Connect the flight battery to the ESC. The orange LED on the receiver will begin flashing rapidly to indicate bind mode.
4. Move the throttle stick to the low throttle position in normal mode.
5. Follow the procedures of your specific transmitter to enter Bind Mode. The system will connect within a few seconds. Once connected, the orange LED will turn off and the receiver will start the initialization process.
6. When the initialization process is complete, the Status LED light will come on solid orange.
7. Disconnect the flight battery and remove the bind plug from the receiver. Store the bind plug in a convenient place.

WARNING: You must move the throttle to the LOW/OFF position during binding. Failure to do so may cause the rotor blades to spin and the helicopter to lift during the receiver initialization, which could result in damage to property and injury.

NOTICE: Remove the bind plug to prevent the system from entering bind mode the next time the power is turned on.

CAUTION: When using a Futaba® transmitter with a Spektrum™ DSM2® module, you must reverse the throttle channel

If you encounter problems, obey binding instructions and refer to transmitter troubleshooting guide for other instructions. If needed, contact the appropriate Horizon Product Support office.

Throttle Hold

Throttle hold only turns off the motor on an electric helicopter. You maintain pitch and direction control.

The blades will spin if throttle hold is OFF. For safety, turn throttle hold ON any time you need to touch the helicopter or check the direction controls.

Throttle hold is also used to turn off the motor if the helicopter is out of control, in danger of crashing, or both.

Control Tests

CAUTION: You must complete the Tail Rotor and Cyclic tests prior to every flight. Failure to complete the tests and ensuring the sensor corrects in the proper direction can cause the helicopter to crash, resulting in property damage and injury.

Tail Rotor

1. Power on the transmitter.
2. Turn TH HOLD ON and put the transmitter in normal mode.
3. Connect the flight battery to the ESC.

NOTICE: Do not allow the helicopter to move until the Status LED is solid orange. The receiver will not operate correctly if the helicopter moves before the Status LED is solid orange.

4. Move the rudder stick to the right. The pitch slider on the tail shaft should move toward the tail case. If the pitch slider moves in the opposite direction, ensure the rudder channel reverse setting within the transmitter is set to normal.
5. Release the rudder control. Manually turn the helicopter nose to the left. The flight controller should compensate by moving the tail slider towards the tail case.

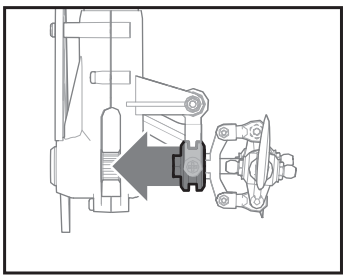

Cyclic

When using a flybarless flight controller, you are controlling rotational rates while the receiver controls the servos. You are not directly controlling the servos with the transmitter.

It is normal for the swashplate to slowly move back to its original position after a stick input and for the servos to not move at the same speed as your control sticks.

1. Tilt the helicopter forward. The swashplate must tilt backward.
2. Tilt the helicopter backward. The swashplate must tilt forward.
3. Roll the helicopter left. The swashplate must roll right.
4. Roll the helicopter right. The swashplate must roll left.

Cyclic and Collective Control Test

Ensure the throttle hold is ON when performing the direction control tests. Test the controls prior to each flight to ensure the servos, linkages and parts operate correctly. If the controls do not react as shown in the illustrations below, confirm the transmitter is programmed correctly before continuing on to the Motor test.

Elevator

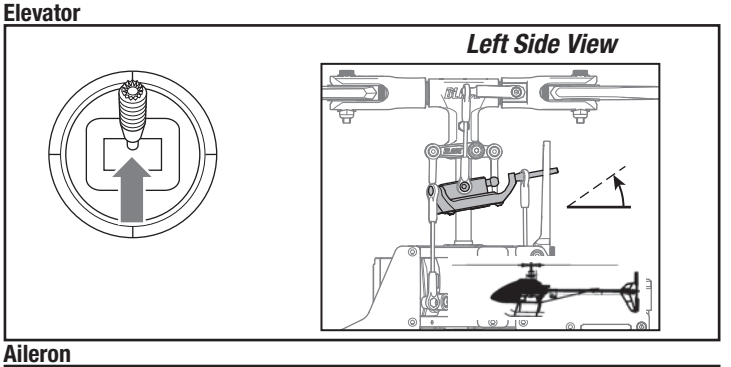

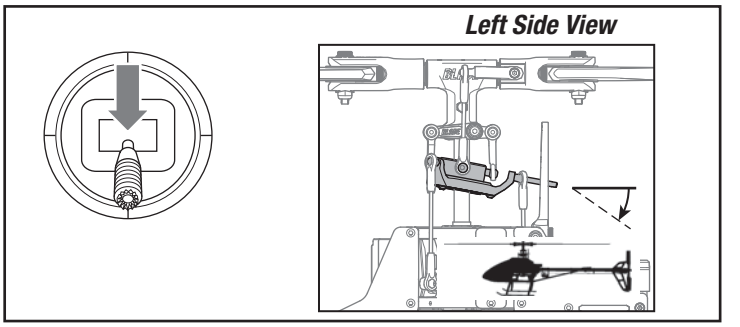

Aileron

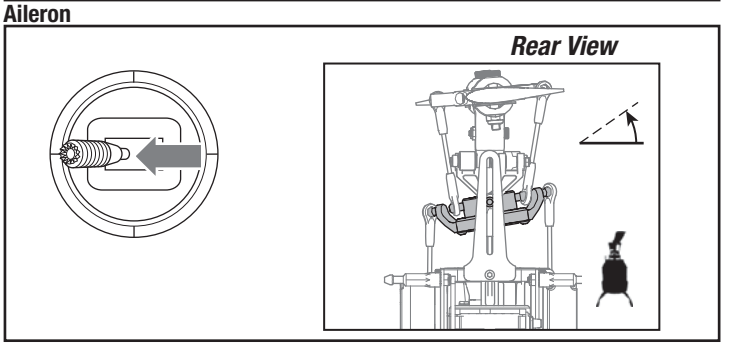

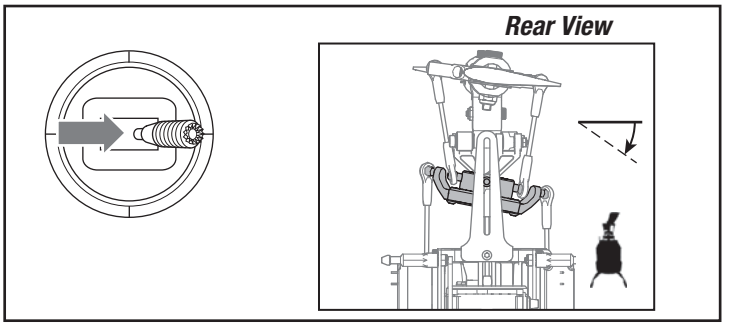

Collective Pitch

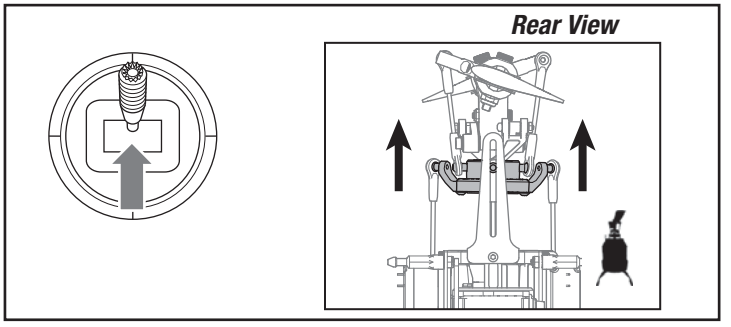

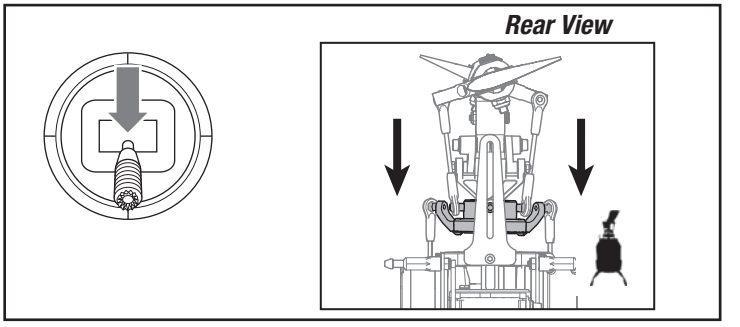

Understanding the Primary Flight Controls

If you are not familiar with the controls of your 330X, take a few minutes to familiarize yourself with them before attempting your first flight.

Collective

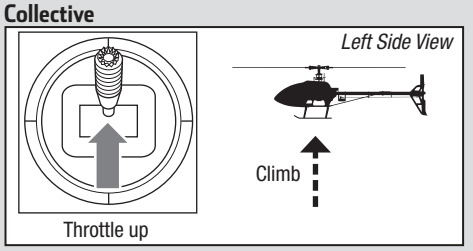

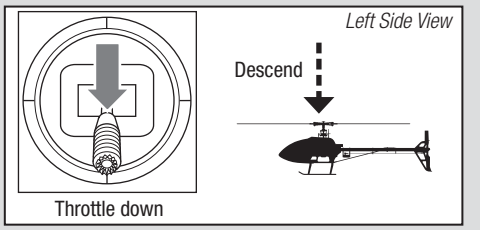

Rudder

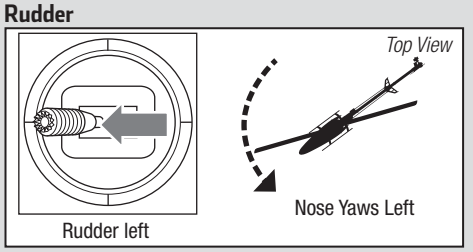

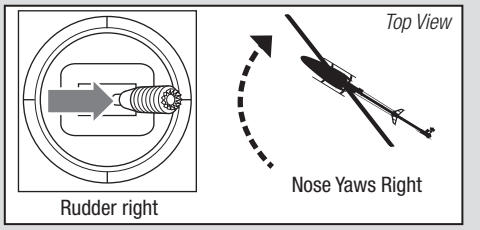

Elevator

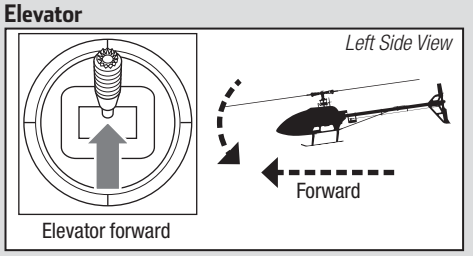

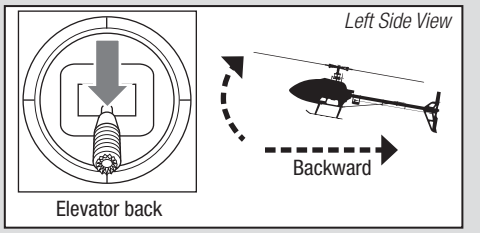

Aileron

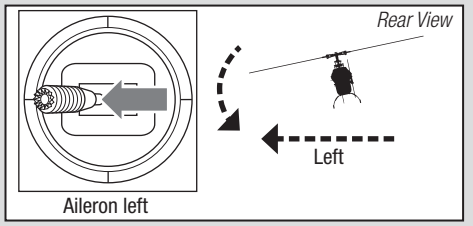

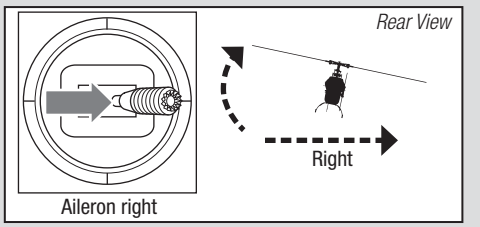

Motor

Place the helicopter outdoors on a clean, flat and level surface (concrete or asphalt) free of obstructions. Always stay clear of moving rotor blades.

1. The motor beeps twice when the helicopter's ESC arms properly. Before continuing, confirm TH HOLD is ON.

WARNING: The motor will spin when throttle is increased while TH HOLD is OFF.

2. Check the swashplate directions to ensure they are moving in the correct direction. Please refer to the diagrams above for reference.

WARNING: Stay at least 30 feet (10 meters) away from the helicopter when the motor is running. Do not attempt to fly the helicopter at this time.

3. Ensure the throttle is lowered completely. Confirm the transmitter is still set to normal flight mode. Turn throttle hold off at this time. Slowly increase the throttle until the blades begin to spin. The main blades spin clockwise when viewing the helicopter from the top. The tail rotor blades spin counterclockwise when viewing the helicopter from the right-hand side.

Low Voltage Cutoff (LVC)

The ESC will continuously lower power to the motor until complete shutdown when the battery reaches 9V under load. This helps prevent over-discharge of the Li-Po battery. Land immediately when the ESC activates LVC. Continuing to fly after LVC can damage the battery, cause a crash or both. Crash damage and batteries damaged due to over-discharge are not covered under warranty.

Repeatedly flying the helicopter until LVC activates will damage the helicopter battery.

Disconnect and remove the Li-Po battery from the aircraft after use to prevent trickle discharge. During storage, make sure the battery charge does not fall below 3V per cell.

Electronic Speed Controller Governor Operation

The Blade 330 X Electronic Speed Controller (ESC) utilizes a head speed governor to maintain a constant head speed during flight. The governor will work to maintain a constant head speed throughout maneuvers and the discharge cycle of the flight battery.

The throttle position determines the requested head speed, and although throttle curves are still used, they will be a constant value; all positions of the curve are set to the same value. The lowest position of the normal flight mode throttle curve must be set to 0 to ensure the motor can be disabled.

The default throttle curve settings listed in the transmitter setup tables should be acceptable to most pilots and we recommend starting with these values. If you feel an adjustment is necessary after a few flights, adjust the throttle percentage for the desired flight mode. We recommend making small changes of 5% to find your preferred head speed.

Remember the throttle position on the transmitter is simply requesting a specific head speed and this is not related to the actual motor power percentage.

Pre-Flight Checklist

- ❏ Check all screws and ensure that they are tight
- ❏ Check belt tension and ensure that it is not too tight or too loose
- ❏ Check main and tail blades to ensure they are not damaged
- ❏ Check all links and make sure they move freely but do not pop off easily
- ❏ Check that flight battery and transmitter battery are fully charged
- ❏ Check all wires to ensure that they are not cut, pinched, or chaffed and are properly secured
- ❏ Check all wire connections
- ❏ Check gears and make sure no teeth are missing
- ❏ Do a complete control test
- ❏ Verify the receiver sensor is correcting in the proper directions
- ❏ Check that servos are functioning properly
- ❏ Check to make sure the flight battery is properly secured
- ❏ Check to make sure receiver is properly secured

Flying the Blade 330X Helicopter

Consult local laws and ordinances before choosing a location to fly your aircraft.

Select a large, open area away from people and objects. Your first flights should be outdoors in low-wind conditions. Always stay at least 30 feet (10 meters) away from the helicopter when it is flying.

The Blade 330X is intended to be flown outdoors by experienced pilots

Takeoff

Deliberately increase throttle and establish a hover at least 24” (0.6 meter) high, outside of ground effect.

⚠ **CAUTION:** Making large inputs to the roll or pitch controls while the helicopter is on the ground may result in a crash.

Flying

The helicopter lifts off the ground when the rotor head reaches a suitable speed. Establish a low-level hover to verify proper operation of your helicopter.

First flights should be performed in normal mode and low cyclic and rudder dual rates until you are familiar with the flying manner of the helicopter.

⚠ **CAUTION:** Always fly the helicopter with your back to the sun and the wind to prevent loss of flight control.

Landing

Establish a low level hover. Deliberately lower the throttle until the helicopter lands.

When the helicopter is in stunt mode:

- The rotor head speed is constant.
- The main rotor will increase negative pitch as the throttle/collective stick is moved from the middle stick position to the low stick position. Negative pitch allows the helicopter to fly upside down and perform aerobatics.

Change between stunt and idle up modes in a hover with the throttle near the hovering stick position.

⚠ **WARNING:** Do not use wooden main blades with the Blade 330 X or injury and/or property damage could occur. Only use Blade 330 X replacement carbon fiber main blades.

Gyro Gain Adjustment

- If the tail wags or oscillates, lower the gain on the gyro.

  On your transmitter’s gyro menu, decrease the gyro gain values a small amount at a time until the helicopter is stable within a particular flight mode.

- If the tail is drifting while hovering, increase the gain on the gyro.

  On your transmitter, increase the gyro gain values a small amount at a time until the tail starts to wag/oscillate. Afterwards, reduce the gain until the tail stops wagging/oscillating within a particular flight mode.

Tail Belt Tension

Belt tension that is too tight results in loss of power and causes the belt to wear more quickly. Tension that is too loose can cause belt damage and loss of tail rotor control in flight.

To check for proper belt tension:

1. View the tail rotor drive belt through the opening at the back of the main frame.
2. Use a hex wrench or standard screwdriver to compress the belt through the opening.
3. Apply light pressure on the belt, compressing the belt toward the left side of the tail boom.
4. The belt tension is correct if the compressed side of the belt reaches approximately halfway to the opposite side of the belt.
   a. If the compressed side of the belt reaches farther than halfway to the other side of the belt, the tension is too loose.
   b. If the compressed side of the belt does not reach halfway to the other side of the belt, the tension is too tight.

To adjust belt tension:

1. Loosen the two horizontal stabilizer screws.
2. Loosen the 4 screws at the back of the main frame.
3. Slide the boom forward or aft to adjust the belt tension.
4. When the belt tension is properly adjusted, tighten the 4 screws at the back of the frame.
5. Tighten the horizontal stabilizer screws.

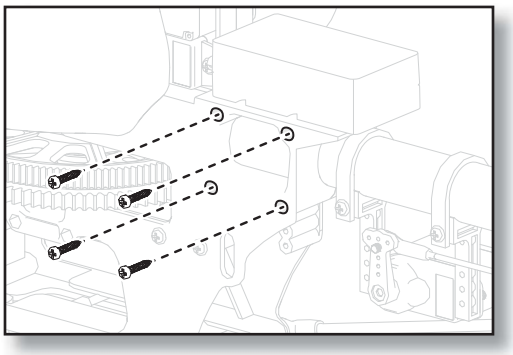

Post-Flight Inspections and Maintenance

Ball Links	Make sure the plastic ball link holds the control ball, but is not tight (binding) on the ball. When a link is too loose on the ball, it can separate from the ball during flight and cause a crash. Replace worn ball links before they fail.
Cleaning	Make sure the battery is not connected before cleaning. Remove dust and debris with a soft brush or a dry lint free cloth.
Bearings	Replace bearings when they become damaged.
Wiring	Make sure wiring does not block moving parts. Replace damaged wiring and loose connectors.
Fasteners	Make sure there are no loose screws, other fasteners or connectors. Do not over tighten metal screws in plastic parts. Tighten screw so parts are mated together, then turn screw only 1/8th of a turn more.
Rotors	Make sure there is no damage to rotor blades and other parts which move at high speed. Damage to these parts includes cracks, burrs, chips or scratches. Replace damaged parts before flying.
Flight Controller	Make sure the receiver is securely attached to the frame. Replace the double-sided tape when necessary. The helicopter will crash if the receiver separates from the helicopter frame.

Advanced Settings

The 330 X default settings are appropriate for most users. We recommend flying with the default parameters before making any adjustments.

WARNING: To ensure your safety, always disconnect the motor wires from the ESC before performing the following steps. After you have completed the adjustments, reconnect the motor wires to the ESC before attempting to fly the model.

Telemetry Based Text Generator for Advanced Settings

Advanced parameters may be easily read in text form when using a Spektrum Telemetry based transmitter. Transmitters may require a firmware update to access this function. To register and update Spektrum transmitters, visit SpektrumRC.com.

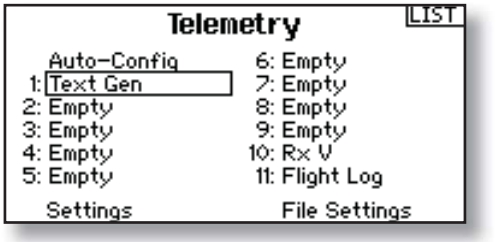

Turning On Text Gen

Access the Telemetry menu, select one of the "Empty" Telemetry slots and scroll to select "Text Gen." Set the display option to active (Act). Once the Text Gen Message feature has been enabled, the transmitter will display text based menus on the telemetry screens for adjusting PID values and servo center points. The helicopter must be bound and initialized for the Text Gen screen to function; scroll from the home screen past the telemetry screen(s) to access the Text Gen screen.

Using Text Gen

The available features and stick inputs used to manipulate the menus are the same as the methods outlined in the following section, but using the text based programming is more intuitive. Refer to the Transmitter manual for details on how to utilize telemetry menus.

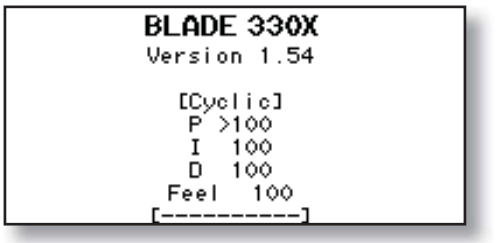

Gain Parameters

1. Cyclic P Gain Adjustment (Default 100%)

Higher gain will result in greater stability. Setting the gain too high may result in random twitches if your model has an excessive level of vibration. High frequency oscillations may also occur if the gain is set too high.

Lower gain will result in less stability. Too low of a value may result in a less stable model particularly outdoors in winds.

If you are located at a higher altitude or in a warmer climate, higher gains may be beneficial—the opposite is true for lower altitude or colder climates.

2. Cyclic I Gain Adjustment (Default 100%)

Higher gain will result in the model remaining still, but may cause low frequency oscillations if increased too far.

Lower gain will result in the model drifting slowly.

If you are located at a higher altitude or in a warmer climate, higher gains may be beneficial—the opposite is true for lower altitude or colder climates.

3. Cyclic D Gain Adjustment (Default 100%)

Higher gain will improve the response rate of your inputs. If the gain is raised too much, high frequency oscillations may occur.

Lower gain will slow down the response to inputs.

4. Cyclic Response (Default 100%)

Higher cyclic response will result in a more aggressive cyclic response.

Lower cyclic response will result in a less aggressive cyclic response.

5. Tailrotor P Gain Adjustment (Default 100%)

Higher gain will result in greater stability. Setting the gain too high may result in random twitches if your model has an excessive level of vibration. High frequency oscillations may also occur if the gain is set too high.

Lower gain may result in a decrease in stability. Too low of a value may result in a less stable model particularly outdoors in winds.

If you are located at a higher altitude or in a warmer climate, higher gains may be beneficial—the opposite is true for lower altitude or colder climates.

6. Tailrotor I Gain Adjustment (Default 100%)

Higher gain results in the tail remaining still. If the gain is raised too far, low speed oscillations may occur.

Lower gain will result in the tail drifting in flight over time.

If you are located at a higher altitude or in a warmer climate, higher gains may be beneficial—the opposite is true for lower altitude or colder climates.

7. Tailrotor D Gain Adjustment (Default 100%)

Higher gain will improve the response rate to your inputs. If raised too far, high frequency oscillations may occur.

Lower gain will slow down the response to inputs, but will not have an effect on stability.

Entering Gain Adjustment Mode

DX6G2, DX6e and DX6i Users:

1. Lower the throttle stick to the lowest position.
2. Power ON the transmitter.
3. Install the flight battery on the helicopter frame, securing it with the hook and loop strap.
4. Connect the battery connector to the ESC.
5. Before initialization is complete, move and hold both transmitter sticks to the bottom right corner as shown.
6. When the servos move, you have entered Gain Adjustment Mode.
7. Release the sticks and proceed to Adjusting the Gain Values to make any desired changes.

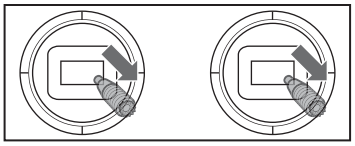

DX7s / DX7 G2 / DX8 / DX8 G2 / DX9 / DX18 / DX20 Users:

1. Lower the throttle stick to the lowest position.
2. Power ON the transmitter.
3. Install the flight battery on the helicopter frame, securing it with the hook and loop strap.
4. Connect the battery connector to the ESC.
5. Place the helicopter on a flat surface and leave it still until the orange receiver LED glows solid, indicating initialization is complete.
6. Move and hold both transmitter sticks to the bottom right corner as shown.
7. Press and hold the bind/panic switch until the swash servos move.
8. Release the sticks and the bind/panic switch. The model is now in Gain Adjustment Mode.
9. Proceed to Adjusting the Gain Values to make any desired changes.

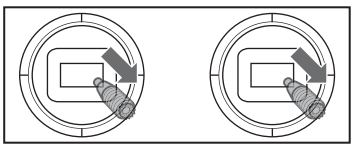

Adjusting the Gain Values

If you are using a Spektrum™ telemetry-enabled transmitter, the gain adjustments can be viewed on the Flight Log screen. Refer to your transmitter instructions to locate this screen. The gain parameter currently selected will flash on the transmitter screen. If you are not using a Spektrum telemetry-enabled transmitter, the parameter and gain values are indicated by the position of the swashplate on the helicopter.

Flight Log Screen

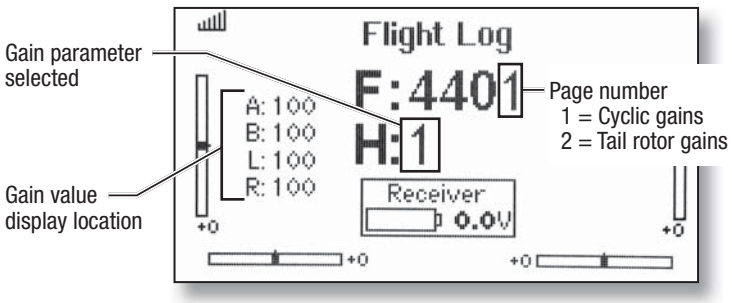

Once you have entered Gain Adjustment Mode, you can move the cyclic stick forward and back to select the gain parameter you would like to adjust. Moving the stick aft will select the next parameter. Moving the stick will select the previous parameter.

The selected gain parameter is indicated on the Flight Log screen and by the lean of the swashplate on the roll axis.

Parameter #	Display location	Swash Position	Page #
1	A	100% to the Left	1
2	B	50% to the Left	1
3	L	25% to the Left	1
4	R	Swashplate Level	1
5	A	25% to the Right	2
6	B	50% to the Right	2
7	L	100% to the Right	2

The current gain value for the selected parameter is indicated on the Flight Log screen and by the angle of the swashplate (forward or backward) as shown in the table at the right.

Swash Position	Gain Value
Full backward	0%
50% backward	50%
Level forward and backward	100%
50% forward	150%
Full forward	200%

Move the cyclic stick left to right to adjust the gain value. Moving the stick right will increase the gain value. Moving the stick left will decrease the gain value.

It is always best to adjust one gain at a time. Make small adjustments (5% or less) and test fly the model to evaluate the adjustments that were made.

If you would like to reset the current gain value to the default value of 100%, move and hold the rudder stick full right for 1 second. The swash will level on the pitch axis, indicating a 100% gain setting.

Saving the Gain Adjustments

DX6, DX6e and DX6i Users:

1. Lower the throttle stick to the lowest position and release the sticks.
2. Move the tail rotor stick to the left and hold until the servos move.
3. Release the tail rotor stick to save the gain adjustments.
4. Reconnect the main drive motor to the ESC. Your model is now ready for flight.

DX7s / DX7 G2 / DX8 / DX8 G2 / DX9 / DX18 / DX20 Users:

1. Lower the throttle stick to the lowest position and release the sticks.
2. Press and hold switch I until the swash servos move.
3. Release switch I to save the gain adjustments.
4. Reconnect the main drive motor to the ESC. Your model is now ready for flight.

Servo Adjustment

Your Blade 330 X was setup at the factory and test flown. The servo adjustment steps are usually only necessary in special circumstances, such as after a crash or if a servo or linkage is replaced.

WARNING: To ensure your safety, always disconnect the motor wires from the ESC before performing the following steps. After you have completed the adjustments, reconnect the motor wires to the ESC before attempting to fly the model.

Entering Servo Adjustment Mode

DX6G2, DX6e and DX6i Users:

1. Lower the throttle stick to the lowest position.
2. Power ON the transmitter.
3. Install the flight battery on the helicopter frame, securing it with the hook and loop strap.
4. Connect the battery connector to the ESC.
5. Before initialization is complete, hold the left stick to the bottom left corner and the right stick to the bottom right corner as shown.
6. When the swashplate servos move, you have entered Servo Adjustment Mode.

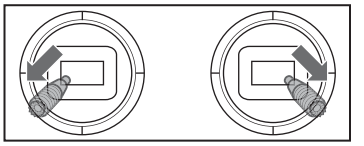

7. Release the sticks and proceed to Adjusting the Servo Neutral Position to make any desired changes.

DX7s / DX7 G2 / DX8 / DX8 G2 / DX9 / DX18 / DX20 Users:

1. Lower the throttle stick to the lowest position.
2. Power ON the transmitter.
3. Install the flight battery on the helicopter frame, securing it with the hook and loop strap.
4. Connect the battery connector to the ESC.
5. Place the helicopter on a flat surface and leave it still until the orange receiver LED glows solid, indicating initialization is complete.
6. Hold the left stick to the bottom left corner and the right stick to the bottom right corner as shown.
7. Hold the bind/panic switch until the swash servos move.

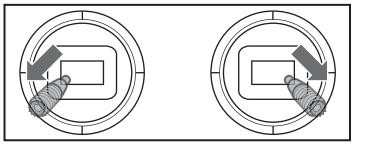

8. Release the sticks and the bind/panic switch. The model is now in Servo Adjustment Mode.
9. Proceed to Adjusting the Servo Neutral Position to make any desired changes.

Adjusting the Servo Neutral Position

With the model in Servo Adjustment Mode, the control stick and gyro inputs are disabled and the servos are held in the neutral position. Check the position of the servo arms to see if they are perpendicular to the servos.

- If the arms are perpendicular to the servos, no adjustment is necessary. Exit Servo Adjustment Mode.
- If one or more servo arm is not perpendicular to the servos, continue the servo adjustment process.

While watching the swashplate servos, apply forward cyclic and release. One of the servos will jump, indicating which servo is selected. Press forward cyclic and release until the servo that needs to be adjusted is selected.

Once the servo you wish to adjust is selected, move the cyclic stick left to right to adjust the servo neutral position in the desired direction.

If you would like to reset the current servo to the default neutral position, hold the rudder stick full right for 1 second.

The range of adjustment is limited. If you are unable to adjust the servo arm to be perpendicular to the servo, you must reset the servo to the default neutral position, remove the servo arm and place it back onto the servo as close to perpendicular as possible. You may then adjust the servo neutral position using the left/right cyclic stick.

Swashplate Leveling

Before saving your adjustments and exiting servo adjustment mode, verify the swashplate is level and both main rotor blades are at 0 degrees.

If they are not, make linkage adjustments as necessary.

Saving the Servo Adjustments

DX6, DX6e, and DX6i Users:

1. Lower the throttle stick to the lowest position and release the sticks.
2. Move the tail rotor stick to the left and hold until the servos move.
3. Release the tail rotor stick to save the servo adjustments.
4. Reconnect the main drive motor to the ESC. Your model is now ready for flight.

DX7s / DX7 G2 / DX8 / DX8 G2 / DX9 / DX18 / DX20 Users:

1. Lower the throttle stick to the lowest position and release the sticks.
2. Press and hold switch I until the swash servos move.
3. Release switch I to save the servo adjustments.
4. Reconnect the main drive motor to the ESC. Your model is now ready for flight.

All of the settings are stored internally, so your adjustments will be maintained each time you initialize the model.

Troubleshooting Guide

Problem	Possible Cause	Solution
Helicopter will not bind to the transmitter (during binding)	Low flight battery or transmitter battery voltage	Fully charge or replace the flight battery and/or transmitter batteries
	receiver is not in bind mode	Make sure the bind plug is connected to the receiver BND/DAT port
	Transmitter is not in bind mode	Power on the transmitter while holding the Trainer/Bind switch. Hold the Trainer/Bind switch until binding is complete
	Transmitter too close to the helicopter during binding process	Power off the transmitter. Move the transmitter further away from the helicopter. Disconnect and reconnect the flight battery to the helicopter and follow binding instructions
Helicopter will not link to the transmitter (after binding)	Helicopter is bound to a different model memory (ModelMatch™ radios only)	Disconnect the flight battery. Select the correct model memory on the transmitter Reconnect the flight battery
	Flight battery/Transmitter battery charge is too low	Replace or recharge batteries
AR636A will not initialize	The helicopter was moved during initialization	Lay the helicopter on its side during initialization if windy
	The transmitter is powered off	Power on the transmitter
	Controls are not centered	Center elevator, aileron and rudder controls. Make sure the throttle is at idle
Helicopter will not respond to the throttle but responds to other controls	Throttle not at idle and/or throttle trim is too high	Lower the throttle stick and lower the throttle trim
	The transmitter is not in normal mode or throttle hold is on	Make sure the transmitter is in normal mode and throttle hold is off
	The motor is not connected to the ESC or the motor wires are damaged	Connect the motor wires to the ESC and check motor wires for damage
	Flight battery charge is too low	Replace or recharge flight battery
	Throttle channel is reversed	Reverse the throttle channel on the transmitter
Helicopter power is lacking	Flight battery has low voltage	Fully charge the flight battery
	Flight battery is old or damaged	Replace the flight battery
	Flight battery cells are unbalanced	Fully charge the flight battery, allowing the charger time to balance the cells
	Excessive current is being drawn through the BEC	Check all servos and the helicopter motor for damage
	Tail drive belt tension is not correct	See "Checking Tail Drive Belt Tension" in this manual
Helicopter will not lift off	Main rotor head is not spinning in the correct direction	Make sure the main rotor head is spinning clockwise. Refer to the motor control test
	Transmitter settings are not correct	Check throttle and pitch curve settings and pitch control direction
	Flight battery has low voltage	Fully charge the flight battery
	Main rotor blades are installed backwards	Install the main rotor blades with the thicker side as the leading edge
The helicopter tail spins out of control	Rudder control and/or sensor direction reversed	Make sure the rudder control and the rudder sensor are operating in the correct direction
	Tail servo is damaged	Check the rudder servo for damage and replace if necessary
	Inadequate control arm throw	Check the rudder control arm for adequate travel and adjust if necessary
	Tail belt is too loose	Make sure the tail drive belt tension is adjusted correctly
The helicopter wobbles in flight	Cyclic gain is too high	Please review the Advanced Settings - Gain Adjustments section
	Headspeed is too low	Increase the helicopter's head speed via your transmitter settings and/or using a freshly charged flight pack
	Dampers are worn	Replace the main rotor head dampers

Limited Warranty

What this Warranty Covers

Horizon Hobby, LLC, (Horizon) warrants to the original purchaser that the product purchased (the "Product") will be free from defects in materials and workmanship at the date of purchase.

What is Not Covered

This warranty is not transferable and does not cover (i) cosmetic damage, (ii) damage due to acts of God, accident, misuse, abuse, negligence, commercial use, or due to improper use, installation, operation or maintenance, (iii) modification of or to any part of the Product, (iv) attempted service by anyone other than a Horizon Hobby authorized service center, (v) Product not purchased from an authorized Horizon dealer, (vi) Product not compliant with applicable technical regulations, or (vii) use that violates any applicable laws, rules, or regulations.

OTHER THAN THE EXPRESS WARRANTY ABOVE, HORIZON MAKES NO OTHER WARRANTY OR REPRESENTATION, AND HEREBY DISCLAIMS ANY AND ALL IMPLIED WARRANTIES, INCLUDING, WITHOUT LIMITATION, THE IMPLIED WARRANTIES OF NON-INFRINGEMENT, MERCHANTABILITY AND FITNESS FOR A PARTICULAR PURPOSE. THE PURCHASER ACKNOWLEDGES THAT THEY ALONE HAVE DETERMINED THAT THE PRODUCT WILL SUITABLY MEET THE REQUIREMENTS OF THE PURCHASER'S INTENDED USE.

Purchaser's Remedy

Horizon's sole obligation and purchaser's sole and exclusive remedy shall be that Horizon will, at its option, either (i) service, or (ii) replace, any Product determined by Horizon to be defective. Horizon reserves the right to inspect any and all Product(s) involved in a warranty claim. Service or replacement decisions are at the sole discretion of Horizon. Proof of purchase is required for all warranty claims. SERVICE OR REPLACEMENT AS PROVIDED UNDER THIS WARRANTY IS THE PURCHASER'S SOLE AND EXCLUSIVE REMEDY.

Limitation of Liability

HORIZON SHALL NOT BE LIABLE FOR SPECIAL, INDIRECT, INCIDENTAL OR CONSEQUENTIAL DAMAGES, LOSS OF PROFITS OR PRODUCTION OR COMMERCIAL LOSS IN ANY WAY, REGARDLESS OF WHETHER SUCH CLAIM IS BASED IN CONTRACT, WARRANTY, TORT, NEGLIGENCE, STRICT LIABILITY OR ANY OTHER THEORY OF LIABILITY, EVEN IF HORIZON HAS BEEN ADVISED OF THE POSSIBILITY OF SUCH DAMAGES. Further, in no event shall the liability of Horizon exceed the individual price of the Product on which liability is asserted. As Horizon has no control over use, setup, final assembly, modification or misuse, no liability shall be assumed nor accepted for any resulting damage or injury. By the act of use, setup or assembly, the user accepts all resulting liability. If you as the purchaser or user are not prepared to accept the liability associated with the use of the Product, purchaser is advised to return the Product immediately in new and unused condition to the place of purchase.

Law

These terms are governed by Illinois law (without regard to conflict of law principals). This warranty gives you specific legal rights, and you may also have other rights which vary from state to state. Horizon reserves the right to change or modify this warranty at any time without notice.

WARRANTY SERVICES

Questions, Assistance, and Services

Your local hobby store and/or place of purchase cannot provide warranty support or service. Once assembly, setup or use of the Product has been started, you must contact your local distributor or Horizon directly. This will enable Horizon to better answer your questions and service you in the event that you may need any assistance. For questions or assistance, please visit our website at www.horizonhobby.com, submit a Product Support Inquiry, or call the toll free telephone number referenced in the Warranty and Service Contact Information section to speak with a Product Support representative.

Inspection or Services

If this Product needs to be inspected or serviced and is compliant in the country you live and use the Product in, please use the Horizon Online Service Request submission process found on our website or call Horizon to obtain a Return Merchandise Authorization (RMA) number. Pack the Product securely using a shipping carton. Please note that original boxes may be included, but are not designed to withstand the rigors of shipping without additional protection. Ship via a carrier that provides tracking and insurance for lost or damaged parcels, as Horizon is not responsible for merchandise until it arrives and is accepted at our facility. An Online Service Request is available at http://www.horizonhobby.com/content/service-center_render-service-center. If you do not have internet access, please contact Horizon Product Support to obtain a RMA number along with instructions for submitting your product for service. When calling Horizon, you will be asked to provide your complete name, street address, email address and phone number where you can be reached during business hours. When sending product into Horizon, please include your RMA number, a list of the included items, and a brief summary of the problem. A copy of your original sales receipt must be included for warranty consideration. Be sure your name, address, and RMA number are clearly written on the outside of the shipping carton.

NOTICE: Do not ship LiPo batteries to Horizon. If you have any issue with a LiPo battery, please contact the appropriate Horizon Product Support office.

Warranty Requirements

For Warranty consideration, you must include your original sales receipt verifying the proof-of-purchase date. Provided warranty conditions have been met, your Product will be serviced or replaced free of charge. Service or replacement decisions are at the sole discretion of Horizon.

Non-Warranty Service

Should your service not be covered by warranty, service will be completed and payment will be required without notification or estimate of the expense unless the expense exceeds 50% of the retail purchase cost. By submitting the item for service you are agreeing to payment of the service without notification. Service estimates are available upon request. You must include this request with your item submitted for service. Non-warranty service estimates will be billed a minimum of ½ hour of labor. In addition you will be billed for return freight. Horizon accepts money orders and cashier's checks, as well as Visa, MasterCard, American Express, and Discover cards. By submitting any item to Horizon for service, you are agreeing to Horizon's Terms and Conditions found on our website http://www.horizonhobby.com/content/service-center_render-service-center.

ATTENTION: Horizon service is limited to Product compliant in the country of use and ownership. If received, a non-compliant Product will not be serviced. Further, the sender will be responsible for arranging return shipment of the un-serviced Product, through a carrier of the sender's choice and at the sender's expense. Horizon will hold non-compliant Product for a period of 60 days from notification, after which it will be discarded. 10/15

Warranty and Service Contact Information

Country of Purchase	Horizon Hobby	Contact Information	Address
United States of America	Horizon Service Center (Repairs and Repair Requests)	servicecenter.horizonhobby.com/RequestForm/	4105 Fieldstone Rd Champaign, Illinois, 61822 USA
	Horizon Product Support (Product Technical Assistance)	productsupport@horizonhobby.com 877-504-0233	
	Sales	websales@horizonhobby.com 800-338-4639	
European Union	Horizon Technischer Service	service@horizonhobby.eu	Hanskampring 9 D 22885 Barsbüttel, Germany
	Sales: Horizon Hobby GmbH	+49 (0) 4121 2655 100	

FCC Information

FCC ID: BRWDASRX15, BRWDXE

This equipment has been tested and found to comply with the limits for Part 15 of the FCC rules. These limits are designed to provide reasonable protection against harmful interference in a residential installation. This equipment generates uses and can radiate radio frequency energy and, if not installed and used in accordance with the instructions, may cause harmful interference to radio communications.

However, there is no guarantee that interference will not occur in a particular installation. If this equipment does cause harmful interference to radio or television reception, which can be determined by turning the equipment off and on, the user is encouraged to try to correct the interference by one or more of the following measures: Reorient or relocate the receiving antenna.

- Increase the separation between the equipment and receiver.
- Connect the equipment to an outlet on a circuit different from that to which the receiver is connected.

This device complies with part 15 of the FCC rules. Operation is subject to the following two conditions: (1) This device may not cause harmful interference, and (2) this device must accept any interference received, including interference that may cause undesired operation.

NOTICE: Modifications to this product will void the user's authority to operate this equipment.

IC Information

IC: 6157A-AMRX15, 6157A-DXE

This device complies with Industry Canada licence-exempt RSS standard(s). Operation is subject to the following two conditions: (1) this device may not cause interference, and (2) this device must accept any interference, including interference that may cause undesired operation of the device."

Compliance Information for the European Union

EU Compliance Statement:

Horizon Hobby, LLC hereby declares that this product is in compliance with the essential requirements and other relevant provisions of the RED and EMC Directives.

A copy of the EU Declaration of Conformity is available online at: http://www.horizonhobby.com/content/support-render-compliance.

Instructions for disposal of WEEE by users in the European Union

This product must not be disposed of with other waste. Instead, it is the user's responsibility to dispose of their waste equipment by handing it over to a designated collections point for the recycling of waste electrical and electronic equipment. The separate collection and recycling of your waste equipment at the time of disposal will help to conserve natural resources and make sure that it is recycled in a manner that protects human health and the environment. For more information about where you can drop off your waste equipment for recycling, please contact your local city office, your household waste disposal service or where you purchased the product.

E328

HINWEIS

Alle Anweisungen, Garantien und anderen zugehörigen Dokumente können im eigenen Ermessen von Horizon Hobby, LLC jederzeit geändert werden. Die aktuelle Produktliteratur finden Sie auf horizonhobby.com unter der Registerkarte „Support“ für das betreffende Produkt.

Spezielle Bedeutungen

Die folgenden Begriffe werden in der gesamten Produktliteratur verwendet, um auf unterschiedlich hohe Gefahrenrisiken beim Betrieb dieses Produkts hinzuweisen:
HINWEIS: Wenn diese Verfahren nicht korrekt befolgt werden, können sich möglicherweise Sachschäden UND geringe oder keine Gefahr von Verletzungen ergeben.
ACHTUNG: Wenn diese Verfahren nicht korrekt befolgt werden, ergeben sich wahrscheinlich Sachschäden UND die Gefahr von schweren Verletzungen.
WARNUNG: Wenn diese Verfahren nicht korrekt befolgt werden, ergeben sich wahrscheinlich Sachschäden, Kollateralschäden und schwere Verletzungen ODER mit hoher Wahrscheinlichkeit oberflächliche Verletzungen.

WARNUNG: Lesen Sie die GESAMTE Bedienungsanleitung, um sich vor dem Betrieb mit den Produktfunktionen vertraut zu machen. Wird das Produkt nicht korrekt betrieben, kann dies zu Schäden am Produkt oder persönlichem Eigentum führen oder schwere Verletzungen verursachen.

Dies ist ein hochentwickeltes Hobby-Produkt. Es muss mit Vorsicht und gesundem Menschenverstand betrieben werden und benötigt gewisse mechanische Grundfähigkeiten. Wird dieses Produkt nicht auf eine sichere und verantwortungsvolle Weise betrieben, kann dies zu Verletzungen oder Schäden am Produkt oder anderen Sachwerten führen. Dieses Produkt eignet sich nicht für die Verwendung durch Kinder ohne direkte Überwachung eines Erwachsenen. Versuchen Sie nicht ohne Genehmigung durch Horizon Hobby, LLC, das Produkt zu zerlegen, es mit inkompatiblen Komponenten zu verwenden oder auf jegliche Weise zu erweitern. Diese Bedienungsanleitung enthält Anweisungen für Sicherheit, Betrieb und Wartung. Es ist unbedingt notwendig, vor Zusammenbau, Einrichtung oder Verwendung alle Anweisungen und Warnhinweise im Handbuch zu lesen und zu befolgen, damit es bestimmungsgemäß betrieben werden kann und Schäden oder schwere Verletzungen vermieden werden.

Nicht geeignet für Kinder unter 14 Jahren. Dies ist kein Spielzeug.

Sicherheitsvorkehrungen und Warnhinweise

- Halten Sie stets in allen Richtungen einen Sicherheitsabstand um Ihr Modell, um Zusammenstöße oder Verletzungen zu vermeiden. Dieses Modell wird von einem Funksignal gesteuert, das Interferenzen von vielen Quellen außerhalb Ihres Einfl ussbereiches unterliegt. Diese Interferenzen können einen augenblicklichen Steuerungsverlust verursachen.
- Betreiben Sie Ihr Modell immer auf einer Freifl äche ohne Fahrzeuge in voller Größe, Verkehr oder Menschen.
- Befolgen Sie stets sorgfältig die Anweisungen und Warnhinweise für das Modell und jegliche optionalen Hilfsgeräte (Ladegeräte, Akkupacks usw.).
- Bewahren Sie alle Chemikalien, Klein- und Elektroteile stets außerhalb der Reichweite von Kindern auf.
- Setzen Sie Geräte, die für diesen Zweck nicht speziell ausgelegt und geschützt sind, niemals Wasser aus. Feuchtigkeit kann die Elektronik beschädigen.
- Stecken Sie keinen Teil des Modells in den Mund, da dies zu schweren Verletzungen oder sogar zum Tod führen kann.
- Betreiben Sie Ihr Modell nie mit fast leeren Senderakkus.
- Halten Sie das Fluggerät immer in Sicht und unter Kontrolle.
- Gehen Sie sofort auf Motor Aus bei Rotorberührung.
- Verwenden Sie immer vollständig geladene Akkus.
- Lassen Sie immer den Sender eingeschaltet wenn das Fluggerät eingeschaltet ist.
- Nehmen Sie vor der Demontage des Fluggerätes die Akkus heraus.
- Halten Sie bewegliche Teile immer sauber.
- Halten Sie die Teile immer trocken.
- Lassen Sie Teile immer erst abkühlen bevor Sie sie anfassen.
- Nehmen Sie die Akkus/Batterien nach Gebrauch heraus.
- Betreiben Sie Ihr Fluggerät niemals mit beschädigter Verkabelung.
- Fassen Sie niemals bewegte Teile an.

WARNUNG GEGEN GEFÄLSCHTE PRODUKTE: Sollten Sie jemals eine Spektrum Komponente ersetzen wollen, kaufen Sie die benötigen Ersatzteile immer bei Horizon Hobby oder einem von Horizon hobby autorisiertem Händler um die hohe Qualität des Produktes zu gewährleisten. Horizon Hobby LLC lehnt jedwede Haftung, Garantie oder Unterstützung sowie Kompatibilitäts- oder Leistungsansprüche zu DSM oder Spektrum in Zusammenhang mit gefälschten Produkten ab.

Exploded View / Explosionszeichnung / Vue Éclatée / Vista Esplosa

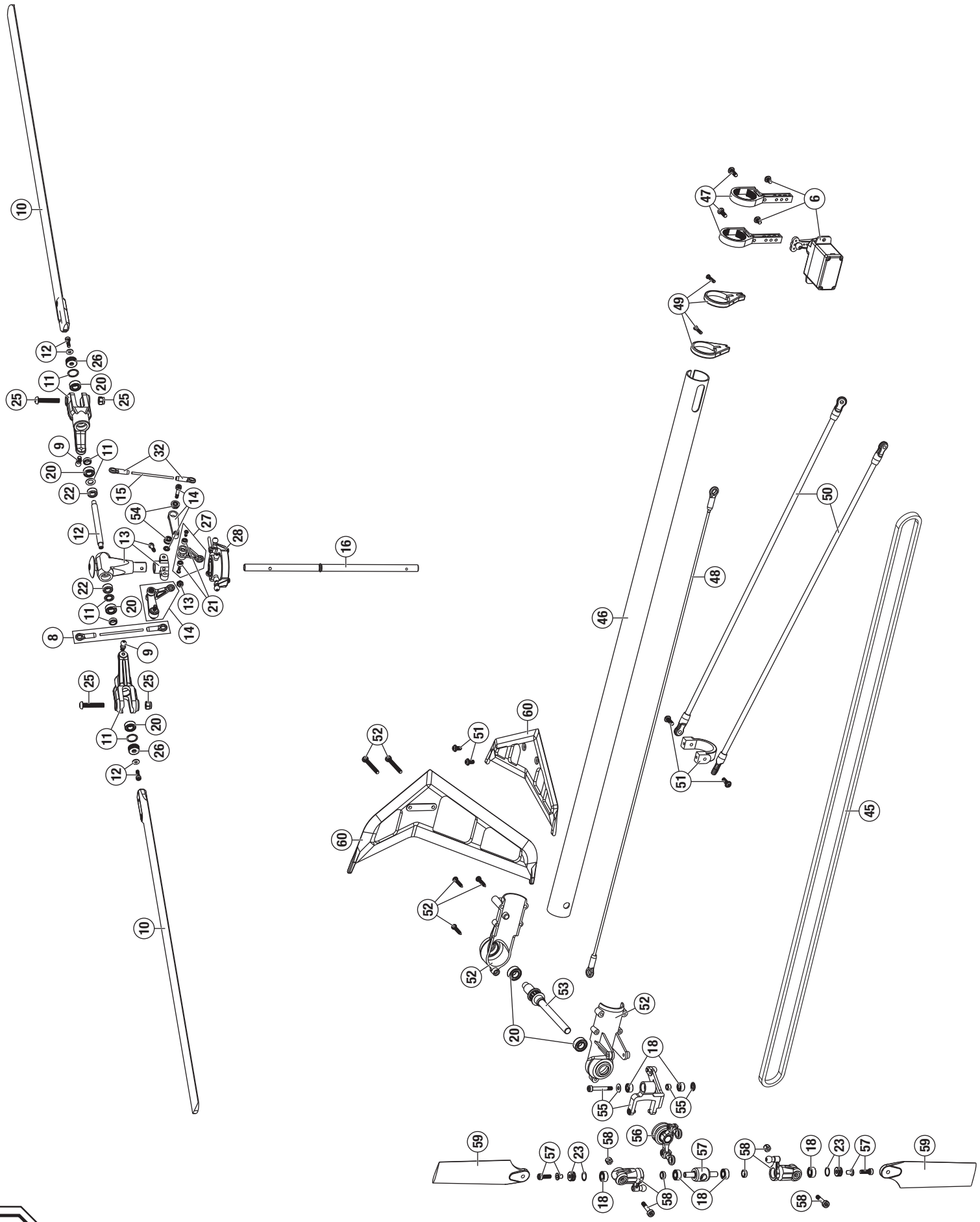

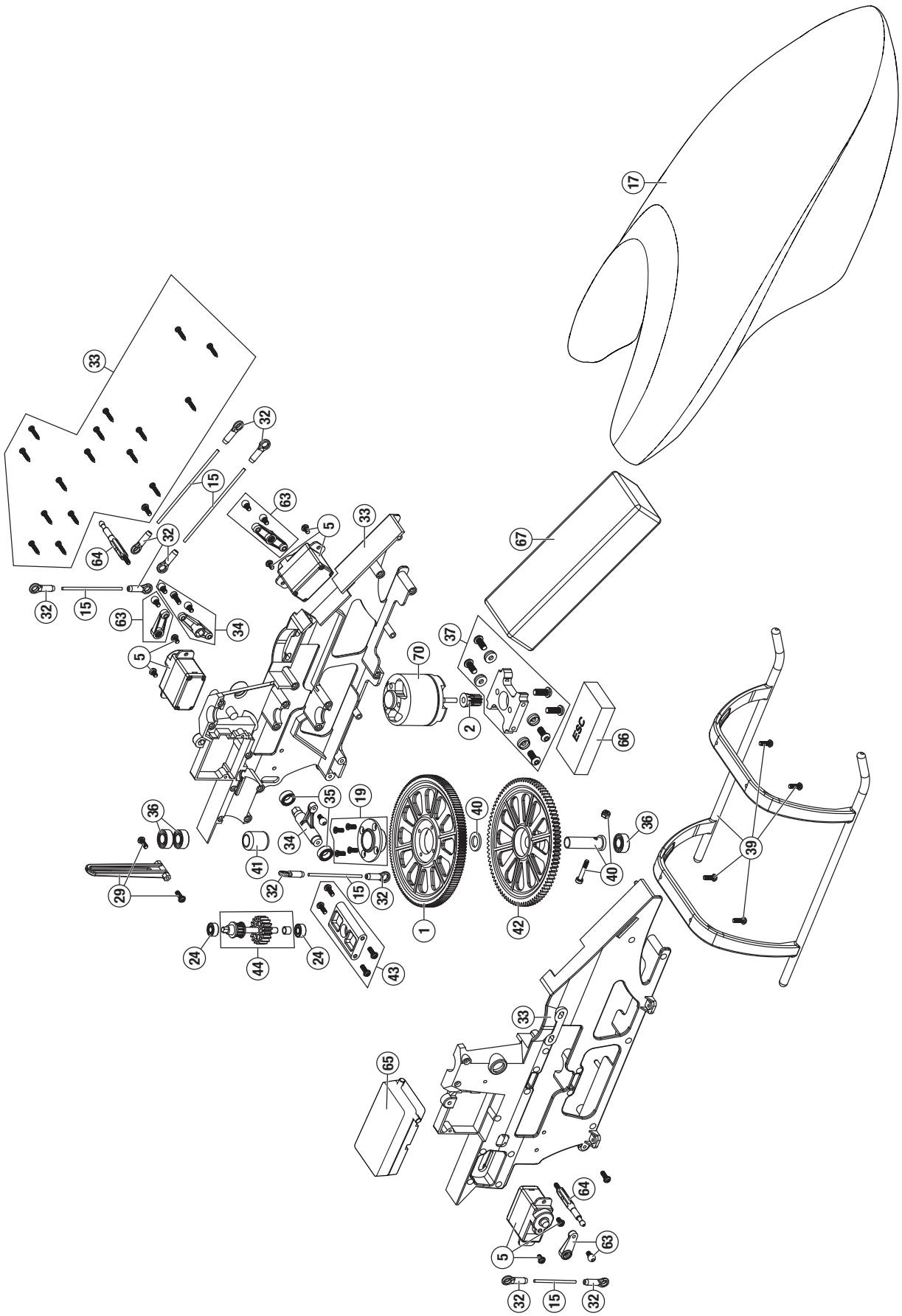
17
33
32
15
63
5
33
64
32
32
15
63
34
5
67
37
70
2
ESC
66
36
35
19
40
36
34
41
32
15
32
40
39
29
1
42
24
44
24
43
33
65
64
63
5
32
15
32

Parts List / Ersatzteile / Pièces de Rechange / Pezzi di Ricambio

#	Part #	English	Deutsch	Français	Italiano
1	BLH1901	Helical Main Gear B450/300X/CFX	Blade 450/300x/300CFX: Hauptzahnrad schrägverz.	B450/300X/300CFX - Couronne principale hélicoïdale	Ingran. principale elicoidale B450/300X/CFX
2	BLH1902	Helical Pinion 10T B450/300X/CFX	Blade 450/300x/300CFX: Ritzel 10 Z schrägverz.	B450/300X/300CFX - Pignon hélicoïdal 10T	Pignone elicoidale 10T B450/300X/CFX
3	SPMSP1040	Gears, Metal Cyclic 12 g Servo	Spektrum Ersatzgetriebe Taumelscheibenservo dig. 12g MG	Servo digital 12g cyclique - Pignons métal de remplacement	Ingranaggi in metallo per servo ciclico 12g
4	SPMSP1041	Gears, Metal Tail 12 g Servo	Spektrum Ersatzgetriebe Heckrotorservo dig. 9g MG	Servo digital 12g anti-couple - Pignons métal de remplacement	Ingranaggi in metallo per servo coda 12g
5	SPMSH3050	Cyclic Servo 12 g Metal Gear	Spektrum Taumelscheibenservo dig. 12g MG	Servo digital 12g de cyclique, pignons métal	Servo ciclico 12g con ingran. metallo
6	SPMSH3060	Tail Servo 12 g Metal Gear	Spektrum Heckrotorservo dig. 12g MG	Servo digital 12g anti-couple, pignons métal	Servo coda 12g con ingran. metallo
7	SPMSP2052	Servo Case 12 g Metal Gear	Spektrum Servogehäuse Set 12g MG	Servo digital 12g - Boitier de servo	Scatola per servo 12g
8	BLH4301	Flybarless Linkage Set: B450 X	Flybarless-Anlenkgestänge-Set: B450 X	Set de tringleries Flybarless : B450 X	Set giunti senza flybar: B450 X
9	BLH4303	Main Rotor Blade Grip FBL Control Balls (2): B450 X	FBL Hauptrotorblatthalterung-Steuerungskugelköpfe (2) B450 X	Rotules de commande de pieds de pales principales FBL (2) : B450 X	Sfere di controllo FBL stringi pale del rotore principale (2): B450 X
10	BLH4315	CF FBL Main Blade Set 325mm with washers: B450 X	CF FBL Hauptblatt-Set 325 mm, mit Unterlagsscheibe B450 X	Set de pales principales 325 mm CF FBL avec rondelles : B450 X	Set pale principali CF FBL 325 mm con rondelle: B450 X
11	BLH4317	Flybarless Main Rotor Grip Set: B450 X	Flybarless-Hauptrotor-Halterungs-Set: B450 X	Set de pieds de rotor principal Flybarless : B450 X	Set stringi pale del rotore principale senza flybar: B450 X
12	BLH4321	Flybarless Spindle Set (2): B450 X	Flybarless-Spindel-Set (2): B450 X	Set d'axes Flybarless (2) : B450 X	Set perno senza flybar (2): B450 X
13	BLH4322	Aluminum Flybarless Head Block Set: B450 X	Aluminium-Flybarless-Rotorkopfblock-Set: B450 X	Set de moyeu de tête Flybarless en aluminium : B450 X	Set blocco testa senza flybar in alluminio: B450 X
14	BLH4331	Flybarless Follower Arms: B450 X	Flybarless-Tastarme: B450 X	Bras suiveurs Flybarless : B450 X	Bracci inseguitore senza flybar: B450 X
15	BLH4338	Linkage Rod/Pushrod Set: B450 X	Anlenkgestänge-/Schubstangen-Set: B450 X	Set de tringleries de traction/pression : B450 X	Set asta/asta di spinta del giunto: B450 X
16	BLH4347	Flybarless Main Shaft (2): B450 X	Flybarless-Hauptwelle (2): B450 X	Axe principal Flybarless (2) : B450 X	Albero principale senza flybar(2): B450 X
17	BLH4001	BLADE Fiberglass canopy: 330X	BLADE Glasfaser-Kabinendach: 330X	Verrière en fibre de verre BLADE : 330X	Tettuccio di vetroresina per BLADE: 330X
18	EFLH1115	Bearing 3x6x2.5mm (2): B450 3D/X, B400	Lager 3 x 6 x 2,5 mm (2): B450 3D/X, B400	Roulement 3x6x2.5mm (2) : B450 3D/X, B400	Cuscinetto 3x6x2,5 mm (2): B450 3D/X, B400
19	BLH1603	One-Way Bearing Hub with One-Way Bearing: B450 3D/X	Lagernabe für Einweglager mit Einweglager: B450 3D/X	Moyeu de roue libre/roue libre : B450 3D/X	Mozzo con cuscinetto unidirezionale: B450 3D/X
20	BLH1605	4x8x3 bearing Main Grip and Tail shaft (4): B450 3D/X	4 x 8 x 3 Lager Haupthalterung und Heckwelle (4): B450 3D/X	Roulement 4x8x3 de pieds de pales et d'axe anticouple (4) : B450 3D/X	Cuscinetto albero principale e albero di coda 4x8x3 (4): B450 3D/X
21	BLH1607	1.5x4x2 Bearings Washout Links (4): B450 3D/X	1,5 x 4 x 2 Lager Washout-Gestänge (4): B450 3D/X	Roulements épaulés 1.5x4x2 (4): B450 3D/X	1,5x4x2 cuscinetti collegamenti washout (4): B450 3D/X
22	BLH1608	Dampeners 80 Deg (4): B450 3D/X	Dämpfer 80 Grad (4): B450 3D/X	Amortisseurs 80 deg (4) : B450 3D/X	Smorzatori 80 gradi (4): B450 3D/X
23	BLH1612	Tail Grip Thrust Bearings: B450 3D/X	Heckhalterung-Gegenlager: B450 3D/X	Butées à billes de pied de pale d'anticouple : B450 3D/X	Cuscinetti di spinta stringi pale di coda: B450 3D/X
24	BLH1613	3x7x3 Bearing (2): B450 3D/X	3 x 7 x 3 Lager (2): B450 3D/X	Roulement 3x7x3 (2) : B450 3D/X	3x7x3 cuscinetto (2): B450 3D/X
25	BLH1616	Main Rotor Blade Mounting Screw and Nut Set (2): B450 3D/X	Set Hauptrotorblatt-Befestigungsschrauben und Nuten (2): B450 3D/X	Set de vis et d'écrou pour pales principales (2) : B450 3D/X	Set vite di fissaggio e dado della pala del rotore principale (2): B450 3D/X
26	BLH1620	Main Grip Thrust Bearing (2): B450 3D/X, B400	Haupthalterung-Gegenlager (2): B450 3D/X, B400	Butées à billes de pieds de pales principales (2) : B450 3D/X, B400	Cuscinetto di spinta stringi pala principale (2): B450 3D/X, B400
27	BLH1632	Washout Control Arm Link Set: B450 3D/X	Washout-Steuerarmgestänge-Set: B450 3D/X	Set de tringleries de Washout : B450 3D/X	Set collegamento braccio di controllo washout: B450 3D/X
28	BLH1633	Aluminum and Composite Swashplate: B450 3D/X, B400	Aluminium- und Verbundstoff-Taumelscheibe: B450 3D/X, B400	Plateau cyclique en aluminium et composite : B450 3D/X, B400	Piatto ciclico in alluminio e in composito: B450 3D/X, B400
29	BLH1634	Anti-Rotation Bracket Guide: B450 3D/X, B400	Anti-Rotations-Bügel/-Führung: B450 3D/X, B400	Guide de plateau cyclique : B450 3D/X, B400	Staffa guida anti-rotazione: B450 3D/X, B400
30	BLH1635	Control/ Linkage Ball, Long (4): B450 3D/X, B400	Steuerkugelkopf/Kugelkopf Anlenkgestänge, lang (4): B450 3D/X, B400	Tringleries de commandes, longues (4) : B450 3D/X, B400	Comando/ sfera del giunto, lungo (4): B450 3D/X, B400
31	BLH1636	Control- Linkage Ball, Short (10): B450 3D/X, B400	Steuerkugelkopf/Kugelkopf-Anlenkgestänge, kurz (10): B450 3D/X, B400	Tringleries de commandes, courtes (10) : B450 3D/X, B400	Comando/ sfera del giunto, corto (10): B450 3D/X, B400
32	BLH1637	Ball Link Set (20): B450 3D/X, B400	Kugelkopfpfannen-Set (20): B450 3D/X, B400	Set de rotules (20) : B450 3D/X, B400	Set collegamento sfera (20): B450 3D/X, B400
33	BLH4005	Main Frame Set: 330X	Hauptrahmen-Set: 330X	Châssis : 330X	Set telaio principale: 330X
34	BLH1640	Elevator Control Lever Set: B450 3D/X, B400	Höhenruder-Steuerhebel-Set: B450 3D/X, B400	Set de leviers de commande de profondeur B450 3D/X, B400	Set leva comando elevatore: B450 3D/X, B400
35	BLH1641	5 x 8 x 2.5 Bearing Elevator Control lever (2): B450 3D/X, B400	5 x 8 x 2,5 Lager Höhenruder-Steuerhebel (2): B450 3D/X, B400	Roulements 5x8x2,5 de levier de commande de profondeur (2) : B450 3D/X, B400	5 x 8 x 2,5 cuscinetto leva comando elevatore (2): B450 3D/X, B400
36	BLH1642	5 x 10 x 4 Bearings Main Shaft (2): B450 3D/X, B400	5 x 10 x 4 Lager Hauptwelle (2): B450 3D/X, B400	Roulements 5x10x4 d'axe principal (2) : B450 3D/X, B400	5 x 10 x 4 cuscinetti albero principale (2): B450 3D/X, B400

#	Part #	English	Deutsch	Français	Italiano
37	BLH1643	Aluminum Motor Mount Set: B450 3D/X, B400	Aluminium-Motorbefestigungs-Set: B450 3D/X, B400	Set de fixations moteur en aluminium : B450 3D/X, B400	Set montante del motore in allumino: B450 3D/X, B400
38	BLH1644	Hook & Loop Battery Strap: B450 3D/X, B400 (not shown)	Akku-Klettverschlussband B450 3D/X, B400 (nicht gezeigt)	Sangles crochet et boucle pour ruban adhésif d'accu : B450 3D/X, B400 (non représenté)	Bandella e gancio della batteria: B450 3D/X, B400 (non mostrato)
39	BLH1645	Landing Gear Set: B450 3D/X	Fahrwerk-Set: B450 3D/X	Set de train d'atterrissage : B450 3D/X	Set del carrello di atterraggio: B450 3D/X
40	BLH1649	One-Way Bearing Shaft and Shim Set: B450 3D/X, B400	Set Einweglagerwelle und Unterlagss-cheiben: B450 3D/X, B400	Axe de roue libre et set de rondelles : B450 3D/X, B400	Set albero ingranaggio di autorotazione e spessore: B450 3D/X, B400
41	BLH1652	One-Way Bearing 6 x 10 x 12: B450 3D/X, B400	Einweglager 6 x 10 x 12: B450 3D/X, B400	Roue libre 6x10x12 : B450 3D/X, B400	Cuscinetto unidirezionale 6 x 10 x 12: B450 3D/X, B400
42	BLH1653	Main Tail Drive Gear (2): B450 3D/X	Heckhauptgetriebe (2): B450 3D/X	Couronne d'anticouple (2) : B450 3D/X	Ingranaggio di trasmissione di coda princi-pale (2): B450 3D/X
43	BLH1654	Tail Drive Shaft Lower Bearing Block Mount: B450 3D/X	Befestigung Heckantriebswelle unterer Lagerblock: B450 3D/X	Support de roulement inférieur : B450 3D/X	Montante blocco cuscinetto inferiore dell'albero di tramissione di coda: B450 3D/X
44	BLH1655	Tail Drive Gear Pulley Assembly: B450 3D/X, B400	Heckgetriebe-Riemenscheiben-Anord-nung: B450 3D/X, B400	Arbre d'anticouple pignon/poulie : B450 3D/X, B400	Gruppo puleggia ingranaggio di trasmis-sione di coda: B450 3D/X, B400
45	BLH1656	Tail Drive Belt: B450 3D/X, B400	Antriebsriemen Heck: B450 3D/X, B400	Courroie d'anticouple : B450 3D/X, B400	Cinghia di trasmissione di coda: B450 3D/X, B400
46	BLH1657	Tail Booms (2): B450 3D/X	Heckausleger (2): B450 3D/X	Poutre de queue (2) : B450 3D/X	Aste di coda(2): B450 3D/X
47	BLH1658	Tail Servo Boom Mount (2): B450 3D/X	Servobefestigung Heckausleger (2): B450 3D/X	Fixation de servo d'anticouple (2) : B450 3D/X	Montante asta servo di coda (2): B450 3D/X
48	BLH1659	Tail Linkage Pushrod set (2): B450 3D/X	Anlenkgestänge-/Schubstangen-Set für Heck (2): B450 3D/X	Tringlerie de commande d'anticouple (2) : B450 3D/X	Set asta di spinta giunti di coda (2): B450 3D/X
49	BLH1660	Tail Pushrod Support Guide Set: B450 3D/X	Heck-Schubstangen-Stützführung-Set: B450 3D/X	Set de guide de commande d'anticouple : B450 3D/X	Set guida di sostegno asta di spinta di coda: B450 3D/X
50	BLH1661	Tail Boom Brace Support Set (2): B450 3D/X	Heckauslegerhalterungs/Stützset (2): B450 3D/X	Set de renforts et supports de tube de queue (2) : B450 3D/X	Set sostegno braccio asta di coda (2): B450 3D/X
51	BLH1662	Horizontal Stabilizer Fin Mount: B450 3D/X	Befestigung horizontale Stabilisierungs-flosse: B450 3D/X	Fixation de dérive et stabilisateur : B450 3D/X	Montaggio deriva di stabilizzazione oriz-zontale: B450 3D/X
52	BLH1663	Tail Case Set: B450 3D/X	Heckabdeckungs-Set: B450 3D/X	Set de boîtier d'anticouple B450 3D/X	Set case coda: B450 3D/X
53	BLH1665	Tail Rotor Shaft and Drive Pulley (2): B450 3D/X	Welle und Antriebsscheibe Heckrotor (2): B450 3D/X	Axe et poulie de rotor d'anticouple (2) : B450 3D/X	Albero rotore di coda e puleggia di trasmis-sione (2): B450 3D/X
54	BLH1666	2x5x2.5 Bearing: B450, B400	2 x 5 x 2,5 Lager: B450, B400	Roulement 2x5x2.5 : B450, B400	2x5x2,5 cuscinetto: B450, B400
55	BLH1667	Tail Rotor Pitch Lever Set: B450 3D/X	Heckrotor-Pitchhebel-Set: B450 3D/X	Set de levier de pas d'anticouple : B450 3D/X	Set leva pitch del rotore di coda: B450 3D/X
56	BLH1668	Tail Rotor Pitch Control Slider Set: B450 3D/X	Heckrotor-Pitchschieberegler-Set: B450 3D/X	Set de slider d'anticouple : B450 3D/X	Set cursore comando passo rotore di coda: B450 3D/X
57	BLH1669	Tail Rotor Hub Set: B450 3D/X	Heckrotornaben-Set: B450 3D/X	Moyeu d'anticouple : B450 3D/X	Set mozzo rotore di coda: B450 3D/X
58	BLH1670	Tail Rotor Blade Grip Holder Set: B450 3D/X	Heckrotorblatthalterungs-Set: B450 3D/X	Set de pieds de pales d'anticouple : B450 3D/X	Set sostegno stringi pala rotore di coda: B450 3D/X
59	BLH1671	Tail Rotor Blade Set: B450 3D/X	Heckrotorblatt-Set: B450 3D/X	Set de pales d'anticouple : B450 3D/X	Set pale del rotore di coda: B450 3D/X
60	BLH1672	Stabilizer Fin Set White: B450 3D/X	Stabilisierungsflossen-Set, weiß: B450 3D/X	Set Dérive/stabilisateur, blanc : B450 3D/X	Set deriva di stabilizzazione bianca: B450 3D/X
61	BLH1673	Complete Hardware Set: B450 3D/X	Komplettes Hardware-Set: B450 3D/X	Set de visserie : B450 3D/X	Set completo hardware: B450 3D/X
62	BLH1674	Mounting Accesssories, Screw-driver & Wrench: B450 3D/X, B400 (not shown)	Befestigungszubehör, Schraubenzieher & Schraubenschlüssel: B450 3D/X, B400 (nicht gezeigt)	Set d'outils tournevis et clés : B450 3D/X, B400 (non représenté)	Accesssori montaggio, cacciavite e chiave: B450 3D/X, B400 (non mostrato)
63	BLH1676	Servo Arm Set: B450 3D/X, B400	Servoarm-Set: B450 3D/X, B400	Set de bras de servos : B450 3D/X, B400	Set braccio del servo: B450 3D/X, B400
64	BLH1679	Canopy Mounts (2): B450 3D/X	Canopy-Befestigungselemente (2): B450 3D/X	Fixations de bulle (2) : B450 3D/X	Staffe di montaggio calottina (2): B450 3D/X
65	BLH4002	BLADE Repl RX: 330X	BLADE Ersatz RX: 330X	Récepteur de rechange BLADE : 330X	Ricevente sostitutiva per BLADE: 330X
66	BLH5052	Brushless ESC 45A	Bürstenloser Geschwindigkeitsregler 45 A	Variateur ESC sans balais 45 A	ESC brushless 45 A
67	EFLB 22003S30	2200 mAh 3S 11.1V 30C LiPo 13AWG EC3 (not shown)	2200 mAh 3 S 11,1 V 30 C LiPo 13 AWG EC 3 (nicht gezeigt)	Li-Po 11,1 V 2200 mAh 3S 30C 13AWG EC3 (non représentée)	2200 mAh 3S 11,1 V 30C LiPo 13AWG EC3 (non mostrato)
68	BLH1001	Mini Helicopter Main Blade Holder (not shown)	Mini-Helikopter-Hauptblatt-Halterung (nicht gezeigt)	Support de pales principales Hélico (non représenté)	Supporto pala principale Mini elicottero (non mostrato)
69	EFLC3115	3S11.1V LiPo Balancing Charger, 1.8A (not shown)	3S 11,1 V LiPo-Balancer-Ladegerät, 1,8 A (nicht gezeigt)	Chargeur-équilibreur Li-Po 11,1 V, 1,8 A 3S (non représenté)	3S 11,1 V LiPo caricabatterie con bilancia-tore, 1,8 A (non mostrato)
70	EFLM 1360HA	Brushless 440 Helicopter Motor, 4200Kv	Brushless 440 Helikoptermotor, 4200 KV	Moteur d'hélicoptère Brushless 440, 4200Kv	Motore brushless elicottero 440, 4200 KV

Optional Parts / Optionale Bauteile / Pièces Optionnelles / Pezzi Opzionali

Part #	English	Deutsch	Français	Italiano
BLH1903	Helical Pinion 11T B450/300X/CFX	Blade 450/300x/300CFX: Ritzel 11 Z schrägverz.	B450/300X/300CFX - Pignon hélicoïdal 11T	Pignone elicoidale 11T B450/300X/CFX
BLH1904	Helical Pinion 12T B450/300X/CFX	Blade 450/300x/300CFX: Ritzel 12 Z schrägverz.	B450/300X/300CFX - Pignon hélicoïdal 12T	Pignone elicoidale 12T B450/300X/CFX
BLH1905	Helical Pinion 13T B450/300X/CFX	Blade 450/300x/300CFX: Ritzel 13 Z schrägverz.	B450/300X/300CFX - Pignon hélicoïdal 131T	Pignone elicoidale 13T B450/300X/CFX
BLH1906	Helical Pinion 14T B450/300X/CFX	Blade 450/300x/300CFX: Ritzel 14 Z schrägverz.	B450/300X/300CFX - Pignon hélicoïdal 14T	Pignone elicoidale 14T B450/300X/CFX
BLH1907	Helical Pinion 15T B450/300X/CFX	Blade 450/300x/300CFX: Ritzel 15 Z schrägverz.	B450/300X/300CFX - Pignon hélicoïdal 15T	Pignone elicoidale 15T B450/300X/CFX
BLH4302	Flybarless Setup Tool: B450 X	Flybarless-Setupwerkzeug. B450 X	Outil de réglage Flybarless : B450 X	Attrezzo setup senza flybar: B450 X
BLH4317A	Aluminum Flybarless Main Rotor Grip Set: B450 X	Aluminium-Flybarless-Hauptrotorhalterungs-Set: B450 X	Set de pieds de rotor principal Flybarless en aluminium : B450 X	Set stringi pale del rotore principale senza flybar in alluminio: B450 X
BLH4331A	Aluminum Flybarless Follower Arms: B450 X	Aluminium-Flybarless-Tastarme: B450 X	Bras suiveurs Flybarless en aluminium : B450 X	Bracci inseguitore senza flybar: B450 X
BLH1633A	Aluminum Swashplate: B450 3D/X, B400	Aluminium-Taumelscheibe: B450 3D/X, B400	Plateau cyclique en aluminium : B450 3D/X, B400	Piatto ciclico in alluminio: B450 3D/X, B400
BLH1634A	Aluminum Anti-Rotation Bracket/Guide: B450 3D/X, B400	Aluminium-Anti-Rotations-Bügel/-Führung: B450 3D/X, B400	Guide de plateau cyclique en aluminium : B450 3D/X, B400	Staffa/guida anti-rotazione in alluminio: B450 3D/X, B400
BLH1645B	Landing Gear Set, Black: B450 3D/X	Fahrwerk-Set, schwarz: B450 3D/X	Jeu de train d'atterrissage, Noir : B450 3D/X	Set del carrello di atterraggio, nero: B450 3D/X
BLH1654A	Alum Tail Drive Shaft Lower BearBlck: B450 3D/X, B400	Aluminiumbefestigung Heckantriebswelle unterer Lagerblock: B450 3D/X, B400	Palier inférieur d'arbre d'anticouple en aluminium, Noir : B450 3D/X, B400	Blocco cuscinetto inferiore albero trasmissione di coda in alluminio: B450 3D/X, B400
BLH1655A	Aluminum Tail Drive Gear Pulley Assy: B450 3D/X, B400	Aluminium-Heckgetriebe-Riemenscheiben-Anordnung: B450 3D/X, B400	Arbre pignon/poulie transmission d'anticouple aluminium B450 3D/X, B400	Asse puleggia ingranaggio di trasmissione di coda in alluminio: B450 3D/X, B400
BLH1657C	Carbon Fiber Tail Boom: B450 3D/X	Karbonfaser-Heckausleger: B450 3D/X	Poutre en carbone : B450 3D/X	Asta di coda in fibra di carbonio: B450 3D/X
BLH1658A	Aluminum Tail Servo Boom Mount: B450 3D/X, B400	Aluminium-Servobefestigung Heckausleger: B450 3D/X, B400	Support de servo d'anticouple en aluminium B450 3D/X, B400	Montante asta del servo di coda in alluminio: B450 3D/X, B400
BLH1661A	Tail Boom Brace/Support Set/Aluminum E: B450 3D/X	Heckauslegerhalterung/Stützset/ Aluminium E: B450 3D/X	Set de renforts et support de poutre en aluminium E : B450 3D/X	Sostegno asta della coda/set supporto/alluminio E: B450 3D/X
BLH1662A	Aluminum Horizontal Stab Fin Mount: B450 3D/X	Aluminium-Befestigung horizontale Stabilisierungsflosse: B450 3D/X	Support de dérive et stabilisateur en aluminium : B450 3D/X	Montante deriva stabilizzazione orizzontale in alluminio: B450 3D/X
BLH1663A	Aluminum Tail Case Set: B450 3D/X	Aluminium-Heckabdeckungs-Set: B450 3D/X	Set de boîtier d'anticouple en aluminium B450 3D/X	Set case coda in alluminio: B450 3D/X
BLH1665A	Tail Rotor Shaft Aluminum Drive Pulley: B450 3D/X	Welle und Antriebsscheibe Heckrotor, Aluminium (2): B450 3D/X	Axe d'anticouple et poulie aluminium : B450 3D/X	Puleggia trasmissione in alluminio dell'albero del rotore di coda: B450 3D/X
BLH1667A	Aluminum Tail Rotor Pitch Lever Set: B450 3D/X	Aluminium-Heckrotor-Pitchhebel-Set: B450 3D/X	Levier de pas d'anticouple en aluminium : B450 3D/X	Set leva del pitch del rotore di coda in alluminio: B450 3D/X
BLH1668A	Aluminum Tail Rotor Pitch Control Slider Set: B450 3D/X	Aluminium-Heckrotor-Pitchschieberegler-Set: B450 3D/X	Set de slider d'anticouple en aluminium : B450 3D/X	Set cursore comando passo rotore di coda in alluminio: B450 3D/X
BLH1670A	Aluminum Tail Rotor Blade Grp Set: B450 3D/X	Aluminium-Heckrotorblatt-Set: B450 3D/X	Pieds de pales d'anticouple en aluminium : B450 3D/X	Set stringi pala rotore di coda in alluminio: B450 3D/X
BLH1671B	Tail Rotor Blade Set, Black: B450 3D/X	Heckrotorblatt-Set, schwarz: B450 3D/X	Set de pales d'anticouple, Noir : B450 3D/X	Set pale del rotore di coda, nero: B450 3D/X
BLH1671C	Tail Rotor Blade Set Carbon Fiber: B450 3D/X, B400	Heckrotorblatt-Set, Karbonfaser: B450 3D/X, B400	Set de pales d'anticouple en carbone : B450 3D/X, B400	Set in fibra di carbonio delle pale del rotore di coda: B450 3D/X, B400
BLH1672B	Stab/Fin Set, Black: B450 3D/X	Stabilisator/Flossen-Set, schwarz: B450 3D/X	Set de stabilisateur/dérive, Noir : B450 3D/X	Set stab/der, nero: B450 3D/X
BLH1672C	Stab/Fin Set, Carbon Fiber: B450 3D/X	Stabilisator/Flossen-Set, Karbonfaser: B450 3D/X	Set de stabilisateur/dérive en carbone : B450 3D/X	Set stab/der, fibra di carbonio: B450 3D/X
BLH1676A	Aluminum Servo Control Arms: B450 3D/X, B400	Aluminium-Servosteuerarme: B450 3D/X, B400	Bras de servos en aluminium : B450 3D/X, B400	Bracci comandi servo in alluminio: B450 3D/X, B400
BLH1679A	Aluminum Canopy Mounts: B450 3D/X	Aluminium-Canopy-Befestigungselemente: B450 3D/X	Supports de bulle en aluminium : B450 3D/X	Montanti calottina in alluminio: B450 3D/X
BLH1690A	Swash Leveling Tool: B450 3D/X, B400	Taumelscheibe-Nivellierungswerkzeug B450 3D/X, B400	Outil de réglage de plateau cyclique B450 3D/X, B400	Strumento di livellamento del piatto ciclico: B450 3D/X, B400
BLH4399	Aluminum 450 Flybarless Conversion Set: B450 3D	Aluminium-450 Flybarless-Umrüstungs-Set: B450 3D	Set de conversion 450 Flybarless en aluminium : B450 3D	Set conversione senza flybar 450 in alluminio: B450 3D
BLH1671OR	Tail Rotor Blade Set, Orange: B450 3D/X, B400	Heckrotorblatt-Set, orange: B450 3D/X, B400	Set de pales d'anticouple, Orange : B450 3D/X, B400	Set pale del rotore di coda, arancione: B450 3D/X, B400

Part #	English	Deutsch	Français	Italiano
BLH1671YE	Tail Rotor Blade Set, Yellow: B450 3D/X, B400	Heckrotorblatt-Set, gelb: B450 3D/X, B400	Set de pales d'anticouple, Jaune : B450 3D/X, B400	Set pale del rotore di coda, giallo: B450 3D/X, B400
BLH1671GR	Tail Rotor Blade Set, Green: B450 3D/X, B400	Heckrotorblatt-Set, grün: B450 3D/X, B400	Set de pales d'anticouple, Vert : B450 3D/X, B400	Set pale del rotore di coda, verde: B450 3D/X, B400
BLH1699	450 Carrying Case	450 Tragekoffer	Coffret de transport 450	Valigetta per il trasporto 450
BLH4006	Optional Fiberglass Canopy: 330X	Optionales Glasfaser-Kabinendach: 330X	Verrière en fibre de verre en option : 330X	Tettuccio di vetroresina opzionale: 330X

©2017 Horizon Hobby, LLC.
Blade, DSM, DSM2, DSMX, Celectra, ModelMatch, Spektrum AirWare and EC3 are trademarks or registered trademarks of Horizon Hobby, LLC.
The Spektrum trademark is used with permission of Bachmann Industries, Inc.
Futaba is a registered trademark of Futaba Denshi Kogyo Kabushiki Kaisha Corporation of Japan
US 7,391,320. D774,933. Other patents pending.
Created 06/17 55210 BLH4000, BLH4050