# SETUP SHEET

TEAM LOSI RACING — 8IGHT-E 2.0

Name: Václav Brož
Date: 25/5/2014
Event: Offroad party u Kolina
City: Kolin
State: Czech Republic
Track: Rc club Kolin

Track Conditions: ☐ Indoor ☐ Tight ☑ Smooth ☐ Hard Packed ☑ Blue Groove ☑ Wet ☐ Low Bite ☐ High Bite
☑ Outdoor ☑ Open ☐ Rough ☑ Loose/Loamy ☑ Dry ☑ Dusty ☐ Med Bite ☐ Other

## Front Suspension

Toe: 2 degrees of toe-out
Ride Height: 45 mm
Camber: -1 degrees
Caster: Stock
Sway Bar: 2,3mm
Piston/Oil: 54/400 cst
Spring: green
Limiter/Droop:
Overall Shock Length: 95 mm
Steering Ackerman: long
Bump Steer: down
Camber Link: 2/A
Shock Location: 2/outside

## Differentials

Front: ☑ Standard ☐ Smart
Spring Wire Dia:
Qty of Springs:
Ramp Plate:
Grease:
Diff Fluid: 10000cst

Center: ☑ Standard ☐ Smart
Spring Wire Dia:
Qty of Springs:
Ramp Plate:
Grease:
Diff Fluid: 12500cst

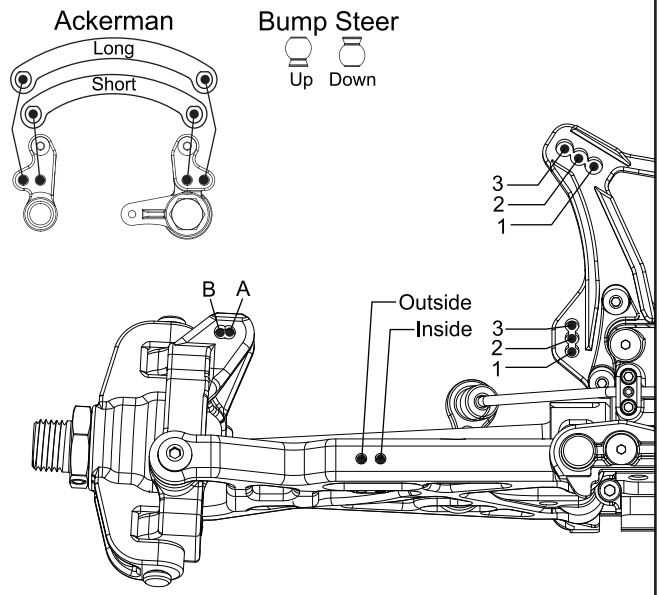


Notes:

## Rear Suspension

Toe: 3 deegres
Anti-Squat: 3 degrees
Ride Height: 45 mm
Camber: -2 degrees
Rear Hub Spacing:
Sway Bar: 2,3mm
Piston/Oil: 500 cst
Spring: green
Limiter/Droop:
Overall Shock Length: 106,5 mm
Camber Link: 2/B
Shock Location: 2/outside
Rear Diff Fluid: 5000 cst

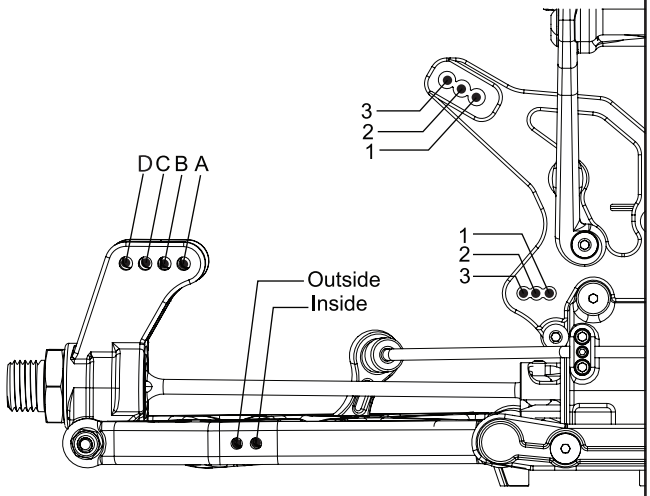


Notes:

## Power Train

Motor: 2000 kv
Battery: 4S LiPo 6500 mAh
Spur: 48 t
Pinion: 15

## ESC

Throttle Limit:
Motor Timing:
Drag Brake:
Braking %:
BEC Voltage:
Initial Acceleration:
Neutral Deadband:

## Tires

| | Type | Compound | Insert |
|---|---|---|---|
| Front: | BSR-1011GW-S | Soft | White 84 mm |
| Rear: | BSR-1011GW-S | Soft | White 84 mm |

Notes: First is a wet variation, Dusty variation:
L-T3126SW, white, soft compound