R/C HELICOPTER 4#SERIES

User Handbook

Specifications:

Main Rotor Diameter: 510 mm
Drive System: 370 SD
Gyro: Built in
Tail Rotor Diameter: 146 mm
Battery: 8.4V 650mAh NI-MH battery
Transmitter: 4CH PPM
Overall Length: 470 mm
All-up Weight: 310g (Battery included)
Receiver: 4-in-1 receiver (receiver, speed controller, gyro and mixer)
Servo: weight 9.1g / speed 0.12sec/60° / torque 1.1kg/cm / dimension 22.5X11.8X27mm

Features:

1) Compact 90° swashplate structure is adopted and easy-to-be-mounted parts like servo are used.

2) High quality 370SD motor, as the main rotor drive, is powerful and strongly windproof. New type automatically balanced rotor head makes the helicopter take off more stably.

3) High quality servo is prompt in reaction; it matches with the strong magnetic N30 tail motor and can fly various flight courses.

4) 4-in-1 receiver mixes together the circuits of receiver, speed controller, gyro and mixer. It is of compacted size, high sensitivity, and strong anti-interference.

5) Equipped with completely symmetrical main rotor blades makes flying high efficient. High quality 8.4V 650mAh Ni-Mh battery pack supports 7-12 minutes flight after being fully charged.

6) 4-Channel transmitter with visible power indicator can avoid helicopter losing control due to the shortage of battery power, and support you to fly without any worry.

Contents

Introduction ---- 2

Warning ---- 2

Cautions ---- 3

Transmitter Features ---- 4

Receiver Identification ---- 5

Battery Mounting and Adjustment ---- 5

Swashplate Adjustment ---- 5

Main Rotor Blade Adjustment ---- 6

Flybar paddle adjustment ---- 6

Tail Rotor Blade Adjustment ---- 6

Flight mode ---- 7

Introduction

Thank you for your purchase of our product. In order to fly your helicopter more easily and conveniently, we kindly recommend you to read carefully the whole user handbook and keep it in a safe way as a reference book for maintenance and adjustment in the future.

Warning

1. The HM 4# series is not a toy. It is a complex combination of electronics, mechanics, and aerodynamics. It requires proper setup and fine adjustment to avoid accident. We accept no liability for damage and consequent damage arising from the use of the products, because we have no control over the way they are installed, used, and operated.

2. When charging the battery, do not overcharge. Overcharging may result in fire or explosion. When the battery is hot during charging, please stop charging at once. Use specified charger only. Never short circuit! The battery must be properly disposed of.

3. Children under 14 years old are strictly forbidden from flying the helicopter.

4. When your helicopter is running, any causes which stop the rotor blades spinning or make collision will result in serious damage or burning. Please immediately turn down the throttle stick at the lowest position!

Cautions

1. Because the helicopter is operated by radio control, it is important to make sure you are always using fresh and/ or fully charged batteries. Never allow the batteries to run low or you could lose control of the helicopter.

2. Do not allow any of the electrical components to get wet. Otherwise electrical damage may occur.

3. You should complete a successful range check of your radio equipment prior to each new day of flying, or prior to the first flight of a new or repaired model.

4. If the helicopter gets dirty, don't use any solvents to clean it. Solvents will damage the plastic and composite parts.

5. Always turn on the transmitter before plugging in the flight battery and always unplug the flight battery before turning off the transmitter.

6. Never cut the receiver antenna shorter or you could lose control of the helicopter during flight.

7. When flying the helicopter, please make sure that the transmitter antenna is completely extended and is pointed up toward the sky, not down toward the ground.

Don't fly your helicopter at the places with these signs

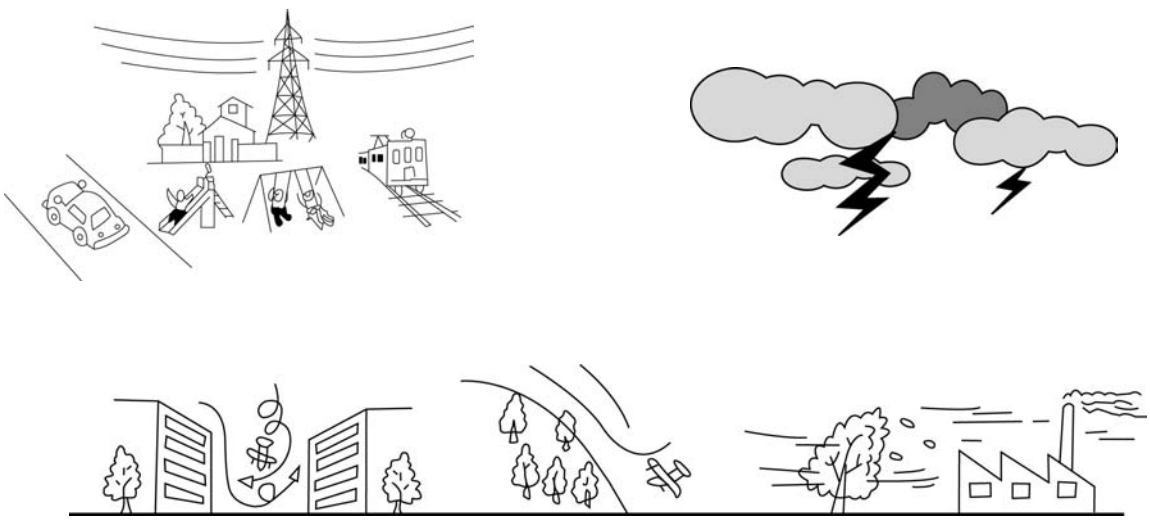

Transmitter Features

Control Identification and function:

MODE I - EUROPE & AUSTRALIA

1. **Left stick/ Rudder.** It controls your helicopter forward, backward, left, and right. Push up to fly your helicopter forward, pull down to fly backward, push leftward to fly left, and push rightward to fly right.

2. **Right stick/ Throttle.** It controls your helicopter ascending, descending, left moving and right moving. Push up to ascend your helicopter; pull down to descend, push leftward to move your helicopter left, and push rightward to move right.

MODE II - NORTH AMERICA

1. **Left stick/ Throttle.** It controls your helicopter ascending, descending, left, and right. Push up to ascend your helicopter, pull down to descend, push leftward to fly left, and push rightward to fly right.

2. **Right stick/ Rudder.** It controls your helicopter forward, backward, left moving and right moving. Push up to fly your helicopter forward, pull down to fly backward, push leftward to move your helicopter left, and push rightward to move right.

3. **Power Indicator.** The indicator is consisted of three colors: red, yellow, and green. Green LED on means the electricity is enough to fly; Green LED off and yellow LED on indicate the power is not enough and stop flying; Yellow LED off and red LED on show the power is in extreme shortage, and please stop flying at once.

4. **Elevator trim.** It controls and modifies your helicopter forward and backward. Push up to fly forward, and pull down to fly backward.

5. **Rudder trim.** The trim controls and modifies your helicopter leftward and rightward. Move the trim left to fly leftward, and move right to fly rightward.

6. **Throttle trim.** The throttle trim controls your helicopter to ascend and descend. Push up the trim to ascend, and pull down to descend.

7. **Aileron trim.** The aileron trim controls your helicopter leftward and rightward. Push the trim left to fly left, and push the trim rightward to fly right.

8. **Power switch.** Turn on or off the power of the transmitter. Push up the switch to turn on the power, and push down to turn off.

9. **Antenna.** Transmit the signals.

10. **Crystal jack.** It facilitates to alter the frequency by changing the crystal oscillator.

11. **Charge jack.** Charge the battery pack.

12. **Battery box.** Please note the polarities while inserting the batteries.

DIP Switch Identification (Fig. 2):

1. **Tail rotor blade.** Reverse the rudder stick direction.

2. **Flybar paddle.** Reverse the aileron servo direction.

3. **Elevator.** Reverse the elevator servo direction.

4. **Throttle.** Reverse the throttle stick direction. **Note**: ascertain the throttle stick to be worked in a correct way before flight.

5-8. **Not used.**

(MODE I - EUROPE & AUSTRALIA)

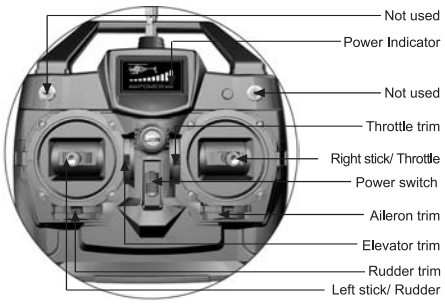

(MODE II - NORTH AMERICA)

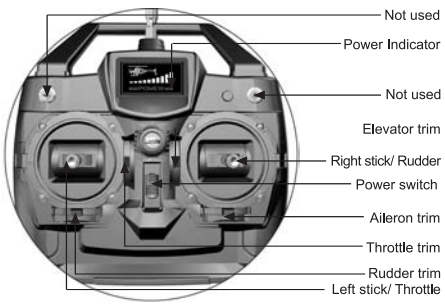

Fig. 1

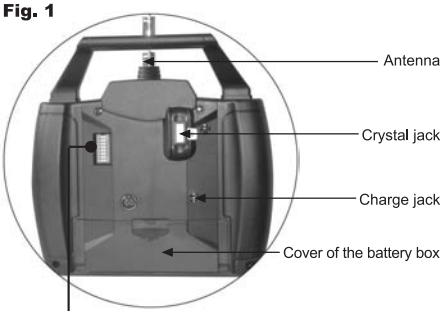

Fig. 2

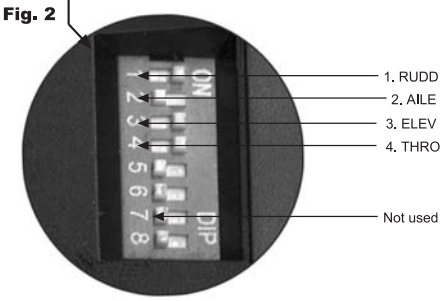

The Factory Default Settings:

CHANNEL	ON/OFF
1	ON
2	OFF
3	ON
4	ON
5-8	NOT USED

Receiver Identification

Receiver Identification (Fig. 3):

1. **Channel 1. (Elevator).** Connect to the elevator servo.
2. **Channel 2. (Flybar paddle).** Connect to the aileron servo.
3. **Throttle (THR).** Connect to the drive motor.
4. **Rudder (RUD).** Connect to the tail motor.
5. **Power (power).** Connect the battery pack.
6. **LED.** Display the status of receiver. After connecting to battery pack, the red LED fast flashing shows that the receiver is receiving transmission signal; the red LED slowly flashing means the signal has been received.

Fig. 3

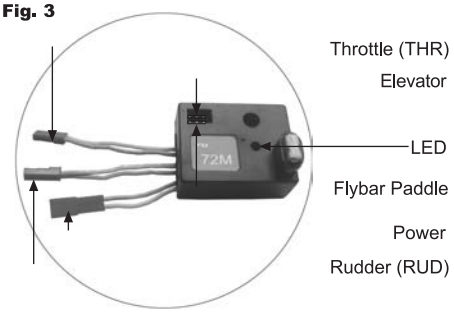

Battery Mounting and Adjustment

1. **Battery pack mounting.** Place the battery pack in the correct position of your helicopter (Fig. 4).
2. **CG balance.** Put your helicopter in a horizontal ground and make the flybar vertical to the tail boom of your helicopter. Lift your helicopter using your index fingers to support the two sides of flybar, and check the balance. The tail boom should be level with the ground. If it is not, move the battery pack backwards or forwards to balance. Always check the Center of Gravity (CG) with the battery pack and canopy installed (Fig. 5).

Fig. 4

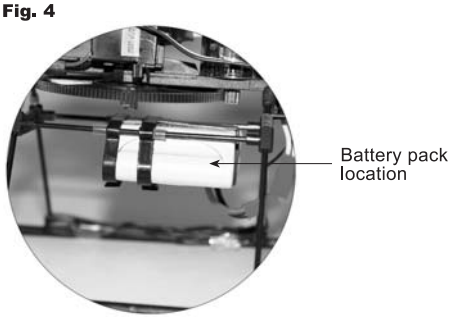

Fig. 5

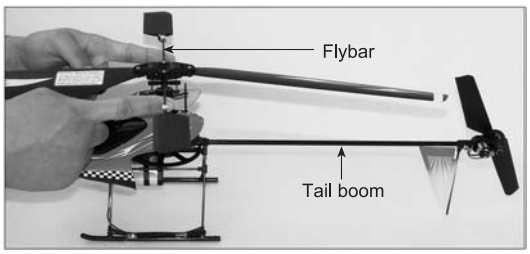

Swashplate Adjustment

1. **Swashplate check.** Pull down the throttle stick and throttle trim to the lowest position, and put the elevator trim and eileron trim in the neutral position. Check whether the swashplate is in a horizontal level.
2. **Swashplate adjustment.** If the swashplate is not in a horizontal level, adjust via the following two steps: The adjustment of elevator and aileron servos. Unscrew servo bellcrank and take servo bellcrank down; reconnect to the battery pack and await the reposition of elevator and aileron servos. Adjust servo bellcrank to the horizontal level and then tighten servo bellcrank screw. Servo linkage rod adjustment. Adjust the servo linkage rod to parellel to swashplate bottom level.

Fig. 6

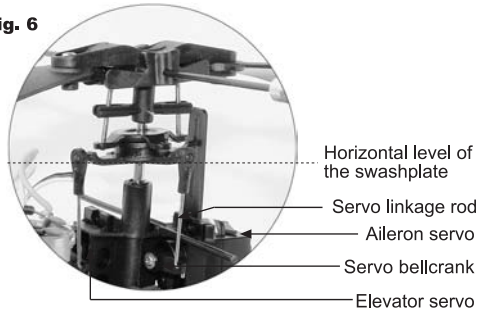

Main Rotor Blade Adjustment

1. **Main rotor blade inspection.** ① inspect whether the Cross recessed pan head screw is too loose (Fig. 7). If the Cross recessed pan head screw is loose, the helicopter may vibrate during flight. ② inspect whether the left and right main rotor blades are in line. If the left and right main rotor blades are not in line, the helicopter will vibrate during flight.

2. **Main rotor blade adjustment.** ① If the Cross recessed pan head screw of the main rotor blade is too loose, tighten the Cross recessed pan head screw (Fig. 7). ② If the left and right main rotor blades are not in line, hold the ends of the main rotor blades and stretch the blades in line (Fig. 7).

Fig. 7

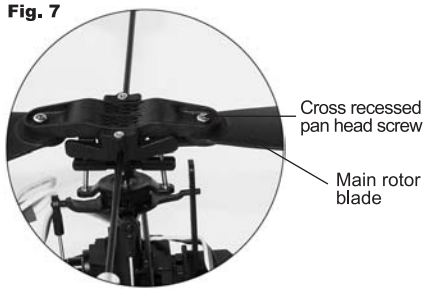

Flybar Paddle Adjustment

1. **Flybar paddle inspection.** ① inspect whether the left and right flybars are symmetrical in length. If the left and right flybars are not exactly same, it is hard to control the flight of the helicopter. ②inspect whether the left and right flybar paddles are horizontal to the same level. If they are not in horizontal level, the flight will be unstable.

2. **Flybar paddle adjustment.** ① if the length of the left and right flybars is not same, loosen the Fixing screw to adjust the length (Fig. 8) and then tighten the screw. ② if the left and right flybar paddles are not at the same horizontal level, loosen the Cross recessed pan head screws and adjust the paddles to the same level and tighten the screw (Fig. 8).

Fig. 8

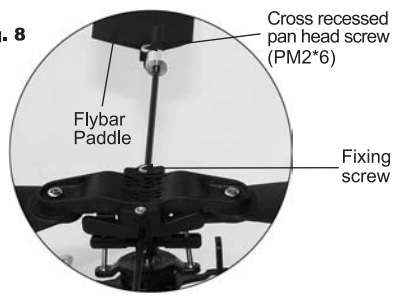

Tail Rotor Blade Adjustment

1. **Tail rotor blade inspection.** ① Check whether the tail gear and the tail motor gear are properly meshing. ② Check whether the tail rotor blades are fixed well (Fig. 9).

2. **Tail rotor blade adjustment.** ① If the tail gear and the tail motor gear are not properly meshing, unscrew the Cross recessed pan head screw and adjust the tail motor to the optimal position, and then tighten the Cross recessed pan head screws. ② If the tail rotor blades are not fixed well, adjust the rubber retainer ring.

Fig. 9

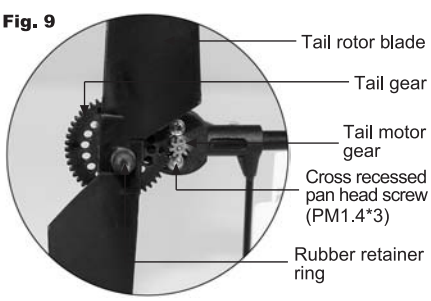

Flight Mode

Normal Mode

ascending	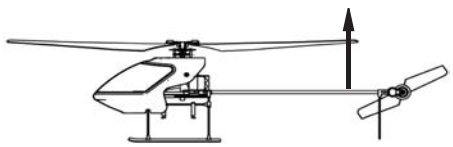	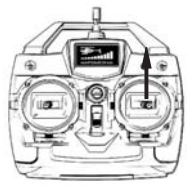	throttle pushing up
descending	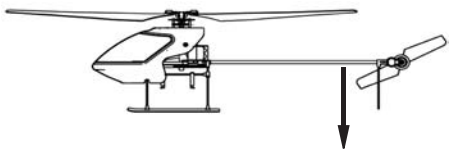		throttle pulling down
head turning left	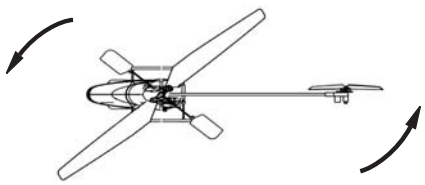	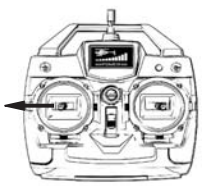	rudder stick moving left
head turning right	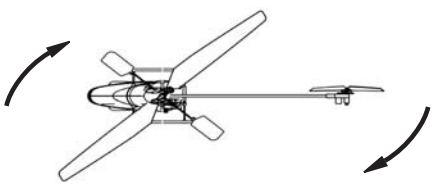		rudder stick moving right
head forward	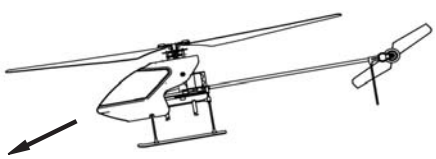	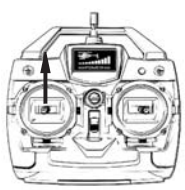	elevator stick pushing up
head backward	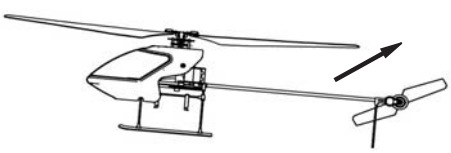	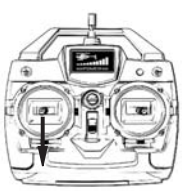	elevator stick pulling down
helicopter moving left		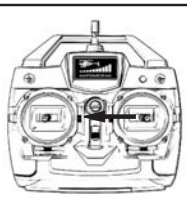	aileron stick moving left
helicopter moving right		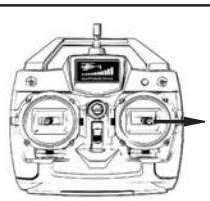	aileron stick moving right

R/C WALKERA PRODUCT

The specifications of the R/C aircraft may be altered without notice.